Landcal Blackbody Source

Type P550P

Operating Instructions

Land Infrared
Dronfield,
S18 1DJ
England
Telephone: 01246 417691
Facsimile: 01246 410585
Email: infrared.sales@landinst.com

Land Infrared
10 Friends Lane
Newtown PA 18940-1804
U.S.A.
Telephone: 215 504-8000
Facsimile: 215 504-0879
Email: irsales@landinstruments.net

Publication Nº: PP970321
Part Nº: 198.032
Issue B/0801

SAFETY INFORMATION

This product complies with current European directives relating to electromagnetic compatibility and safety (EMC directive 89/336/EEC; Low voltage directive 73/23/EEC).

EN 61010-1 Symbol identification

Symbol	Publication	Description
	IEC 417, Nº 5031	Direct current
	IEC 417, Nº 5032	Alternating current
	IEC 417, Nº 5033	Both direct and alternating current
	IEC 617-2, Nº 02-02-06	Three-phase alternating current
	IEC 417, Nº 5017	Earth (ground) terminal
	IEC 417, Nº 5019	Protective conductor terminal
	IEC 417, Nº 5020	Frame or chassis terminal
	IEC 417, Nº 5021	Equipotentiality
	IEC 417, Nº 5007	On (Supply)
	IEC 417, Nº 5008	Off (Supply)
	IEC 417, Nº 5172	Equipment protected throughout by double insulation or reinforced insulation (equivalent to Class II of IEC 536)
	ISO 3864, Nº B.3.6	Caution, risk of electric shock
	ISO 3864, Nº B.3.1	Caution
	BS EN 100015	Observe precautions for handling electrostatic discharge sensitive devices
	BS EN 60825: 1992	Warning, laser radiation
		Warning, hot surface

Contents

1.0 INTRODUCTION

The LANDCAL blackbody source type P550P is a variable temperature, portable black body radiation source designed for use at temperatures up to 550°C (1020°F).

The source is a primary standard black body for the high precision calibration of radiation thermometers over the range 50°C to 550°C (120 to 1020°F). When the set point temperature is reached, the output from the thermometer under test is compared with the temperature of the source as measured by an optional Platinum resistance thermometer whose calibration is traceable to National Standards.

When used in conjunction with the Platinum resistance thermometer, which is supplied complete with a UKAS (United Kingdom Accreditation Service) calibration certificate, high precision is obtained. Alternatively the source can be used in three other ways.

(i) If traceability to National Standards is required to a larger value of uncertainty, a UKAS certificate of calibration for the source can be supplied. The relationship between the indicated temperature on the controller and the radiance temperature, as measured by a secondary standard radiation thermometer, is reported.

(ii) The temperature of the source can be measured by using a radiation thermometer of traceable calibration. This method of calibration can be described as calibration by comparison with a standard radiation thermometer. This method of calibration usually results in the most accurate as errors due to temperature gradients and non-black body conditions are eliminated.

(iii) If traceability to National Standards is not required, the source can be used without any certification. From previous work, the temperature, as shown on the controller indication, has been found to agree with the radiance temperature to within ±8K (±15°F).

The source provides a wide angle target which makes it ideal for use with both fixed installation and portable, hand-held thermometers.

To make the lining up of LAND fixed installation radiation thermometers simpler, an optical bench assembly is offered as an optional extra. When the source is stood on the optional transportation case, the bench to mid target dimension equals that of the optical bench assembly.

2.0 DESCRIPTION

The LANDCAL blackbody source type P550P comprises a cylindrical closed end tube (cavity) approximately 160mm (6.3in) long with an internal diameter of 65mm (2.6in). The cavity is manufactured from Aluminium which is blackened and the closed end is angled at 120° to increase the emissivity value.

The cavity is heated using mineral insulated rod heaters. The temperature is controlled by a thermocouple connected to a 3-term digital controller having a ±0.1°C or ±0.1°F resolution.

An optional standard platinum resistance thermometer possessing a traceable UKAS (United Kingdom Accreditation Service) Certificate is inserted into the cavity from the front of the source and used to determine the true (radiance) temperature.

Fig. 1 Landcal Blackbody source Type P550P

CA970258

3.0 SPECIFICATION

Voltage:		220/240V, 50 to 60 Hz. Part No. 135.182 110/120V, 50 to 60 Hz. Part No. 135.198
Controller:		Eurotherm 2216 or 2416 with RS232 serial interface
Controller input:		Type N thermocouple
Maximum temperature range:		50 to 550°C (120.0 to 999.9°F)*
Recommended temperature range:		100 to 500°C (210 to 930°F) - continuous operation
Heating rate:		Approx. 60 minutes to 500°C (930°F)
Stability:		Radiance temperature variation <±0.5K (±1°F) over a 30 minute period
Radiation cavity -	Material:	Aluminium with black, high temperature refractory coating
	Design:	120° cone
	Inner diameter:	65mm (2.6in)
	Internal length:	160mm (6.3in)
	Cone uniformity:	better than ±1K
Bench to tube centre height:		100mm (2.5in)
Emissivity:		>0.995
Measuring sensor -Type:		Platinum Resistance Thermometer (UKAS certified)
(if supplied)	Length:	450mm (17.7in) plus 2m (78.7in) cable
	Diameter:	6mm outer diameter, inconel sheath
	Uncertainty:	±0.2K or better
	Part Nº:	135.142
Power consumption:		0.8 to 1.0kVA (220/240V operation)
Overall dimensions -Height:		185mm (7.3in)
	Width:	260mm (10.2in)
	Depth:	315mm (12.4in)
Weight -	Nett:	11kg (24.2lb)
	Gross:	13kg (28.6lb)

NOTE*

The controller fitted to the furnace is configured for °C operation. If °F operation is required, details of how to re-configure the controller can be found in the Controller Operating Instructions.

If °F mode of operation is selected the maximum temperature of the source will be 999.9°F which is equivalent to 537°C. Do not attempt to remove the decimal point as this will corrupt control parameters.

4.0 ELECTRICAL SUPPLY

The P550P is supplied with a removable electrical supply cable. The cable has an IEC style connector on one end that mates to an integrated power entry module.

The colour code for the cable is:

Brown lead:	Live
Blue lead:	Neutral
Green/Yellow lead:	Earth

The source may be connected directly to a 5 amp fused plug and socket.

The wiring diagram for the P550P fitted is given in Fig. 2.

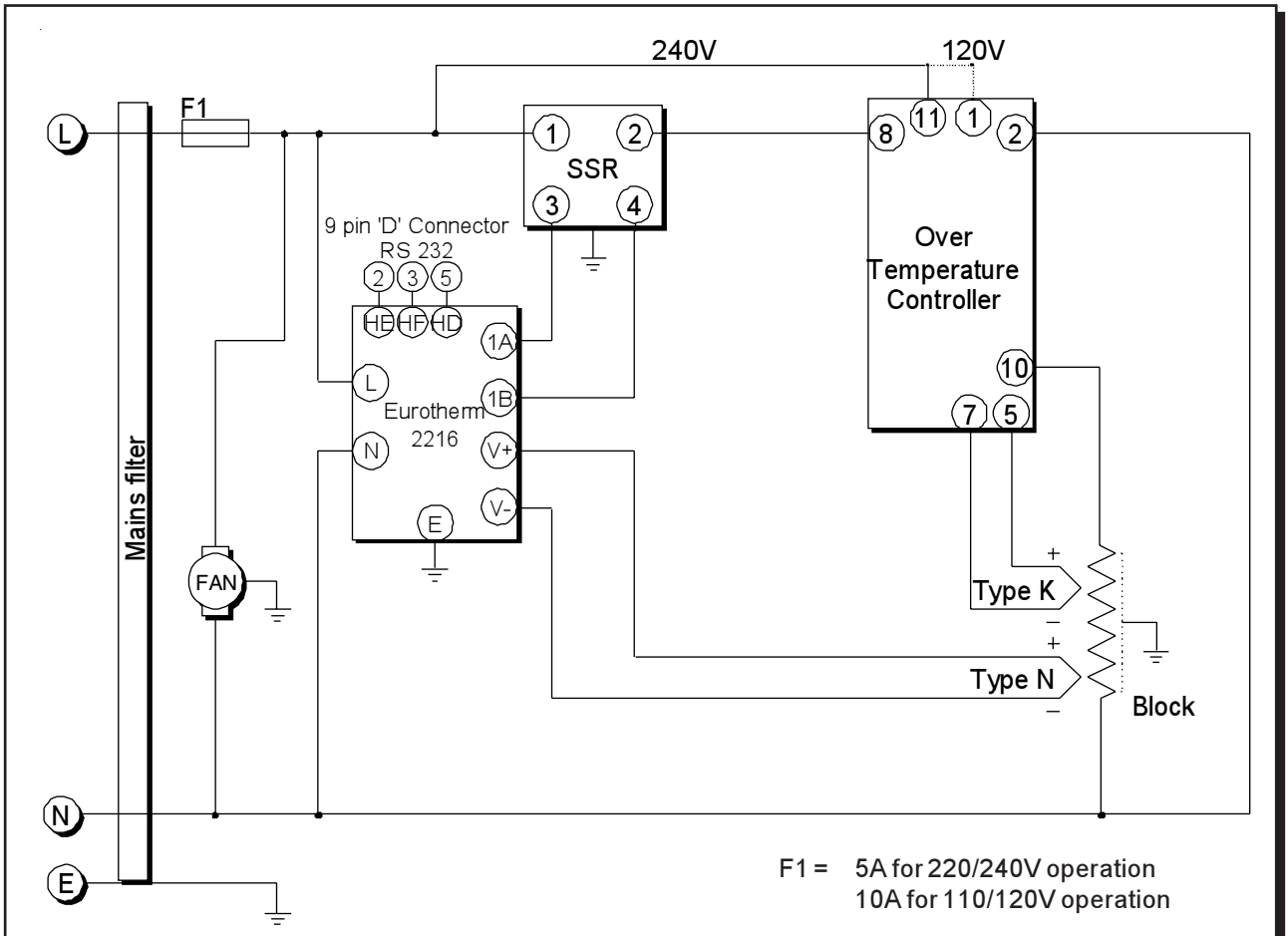

Fig. 2 Wiring diagram for Landcal blackbody source type P550P

CA970220

5.0 COMMISSIONING

5.1 Inspection on receipt

Physically examine all items for damage that may have occurred during transit. Check the contents against the packing note.

If any item has been damaged in transit, this must be reported to the carrier and to the supplier immediately. Do not return damaged instruments to the sender as the carrier will not then consider a claim. Save the packing with the damaged article for inspection by the carrier.

5.2 Connections to the electrical supply

Connect the brown lead to live, blue to neutral and green/yellow to earth. When connected to the electrical supply and switched on, the instruments will light. At no time should any panels be removed when connected to the supply.

5.3 Heating up the source

NOTE

When the source is operating at any temperature above ambient, the front plate and case become hot.

The source can be operated at any temperature in the range 50 to 550°C (120 to 1020°F).

To set the controller to the required value:-

(i) Note that an on-off switch is not fitted to the source. Refer to Section 5.4.

(ii) When the power is connected, the fluorescent indicator panel displays the measured value (upper display) and the set point value (lower display).

(iii) To raise or lower the set point value, depress the respective up/down button. After a short delay, the setpoint will change in the required direction. Release the up/down button when the required temperature value is reached.

(iv) If the source is used in conjunction with a residual current circuit breaker it is possible that on initial heat up the breaker will trip. This is due to the fact that the heater insulation material is hygroscopic and may have absorbed moisture from the atmosphere. This causes the insulation resistance to fall and in a few instances the circuit breaker will trip. Under such conditions the solution is to operate the source for a short time on an unprotected supply until the heat removes the moisture and the insulation resistance returns to a very high value.

NOTE

All other control parameters are factory set and locked. For correct operation, it is not necessary to adjust any other parameters.

5.4 Cooling down the source

WARNING

If this cooling down procedure is not followed, the controller and control circuit will overheat and damage will occur.

A fan is fitted to the source to keep the controller cool and also to increase the cooling rate. If the source has been operated at a temperature in excess of 200°C it is important to allow the source to reduce in temperature before it is disconnected from the mains supply.

After work on the source is completed, a set point temperature of 50°C must be selected. When the source temperature has fallen to a safe value, the source may be switched off.

5.5 Using the RS 232 serial interface port

Connect the source to the personal computer (PC) as shown in Table 1.

Source. 9 pin 'D' connector	Controller terminal	Function	PC connector	
			25 pin	9 pin
Terminal 2	HE	Rx (receive)	Terminal 2	Terminal 3
Terminal 3	HF	Tx (transmit)	Terminal 3	Terminal 2
Terminal 5	HD	Comm	Terminal 7	Terminal 5

Table 1 P550P to PC serial communications (RS 232) connection schedule

6.0 USING THE SOURCE

6.1 Introduction

The P550P has been designed to create an enclosure of uniform temperature, ideal for the calibration of radiation thermometers. The cone point of the cavity is placed in the area of minimum gradients within the source. When calibrating radiation thermometers, the target size requirements of the thermometer should, whenever possible, be fulfilled by the cone. If the thermometer views the walls of the cavity, results of greater uncertainty will be achieved.

6.2 Measuring sensor (Platinum resistance thermometer) - if supplied

Provision has been made to measure the temperature of the target block using a Platinum resistance thermometer, which can be inserted from the front of the source into the cavity. When placed in the measuring position, the temperature of the source, as measured by the sensor, agrees with the cone point radiance temperature to within ±1K (±2°F) over the range 100 to 350°C (210 to 660°F) and to within ±2K (±4°F) over the range 350 to 500°C (660 to 930°F).

The output from the sensor must be measured on an indicator or digital voltmeter having a resolution of 0.1°C.

This is the recommended way to obtain the true temperature of the target cavity. The temperature indication on the controller must not be used as an accurate measurement of target cavity temperature.

7.0 CALIBRATION OF RADIATION THERMOMETERS

7.1 Preparation

The control setting will usually be the normal working temperature of the thermometer to be tested.

For calibration checks that are traceable to National Standards, the target temperature is that indicated by the standard platinum resistance thermometer. If traceability is not required, the source can be used without the resistance thermometer. From previous work, the temperature as shown on the control indication has been found to agree with the radiance temperature to within ±5K.

To make the lining up of LAND fixed installation radiation thermometers simpler, an optical bench assembly is offered as an optional extra. When the source is stood on the optional transportation case, the bench to mid target dimension equals that of the optical bench assembly. Portable radiation thermometers are usually hand held.

Position the holder on the optical bench to obtain the desired distance between target and thermometer. Adjust the vertical and transverse vernier screws to sight the holder correctly on the target.

7.2 Thermometer calibration

When soaked conditions have been obtained, place the thermometer in the holder and measure the thermometer output on the measuring apparatus. Immediately after measure the output from the standard platinum resistance thermometer.
Convert both outputs into temperature by reference to the relevant calibration tables and compare.

7.3 Accuracy of calibration

The source has been designed for the accurate calibration of LAND radiation thermometers. The accuracy that can be achieved by using the source is dependent on:-

(i) The uncertainty of calibration and resolution of the measuring resistance thermometer.
(ii) The emissivity of the source.
(iii) The resolution of the radiation thermometer under test.
(iv) The temperature gradients present in the source.

The uncertainty of the resistance thermometer, specified on the calibration certificate issued by the calibration laboratory, will be a function of:-

(i) The calibration laboratories capabilities.
(ii) The type of resistance thermometer under test.
(iii) The temperature range covered.

A value of ±0.2K at 500°C is typical for the uncertainty. A value of ±0.1 to ±1.0K (±0.4 to ±2.0°F) should be specified for the resolution, depending on the type of measuring equipment used.

As the emissivity of the source is less than 1.00, the radiance temperature will be dependent on the wavelength of the thermometer under test. For example, a source operating at a temperature of 50°C (122°F), with emissivity of 1.00 will show a temperature of 50°C (122°F) for a thermometer having a pyroelectric (wavelength = 8 to 14µm) detector. However, a source operating with emissivity of 0.995 at 50°C (122°F) for the same thermometer will show a radiance temperature of 49.8°C (121.6°F) for the same thermometer.

Most hand held thermometers and fixed installation thermometers used in conjunction with an indicator have a resolution of ±1K (±2°F). Fixed installation thermometers, whose output is measured on a digital voltmeter, will have a resolution of ±0.1 to ±0.5K (±0.2 to ±1.0°F).

Any temperature gradients within the source will cause a difference between the temperature as measured by the resistance thermometer and the true radiance temperature of the source. Values of ±0.5K (±1°F) at 50°C rising to ±2K (±4°F) are typical.

To determine the best measurement capability, the uncertainty of each individual measurement component should be added together. Typical values are as follows:-

at 50°C uncertainty is ±1K (±2°F)
at 500°C uncertainty is ±5K (±10°F)

7.4 Calibration procedures

When calibrating radiation thermometers, it is important to follow documented step-by-step procedures to ensure that specified calibration conditions, such as calibration distance, furnace temperature and aperture size are always met.

If you experience any difficulty in writing your own procedures, LAND Infrared would be pleased to offer guidance as to which calibration conditions must be adopted for LAND products.

8.0 MAINTENANCE

8.1 Incorrect operation/failure

The source is fully tested and evaluated before supply and should give years of trouble free operation. No regular servicing or maintenance is required. In the unlikely event of a failure, we recommend the source is returned either directly to a LAND company, or to one of the LAND distributors for repair.

8.2 UKAS certification

To continue to carry out calibration checks which are traceable to National Standards, it will be necessary to obtain a Certificate of Calibration. Depending on useage, and the method of calibration employed, the Platinum resistance thermometer and/or the P550P source and/or the standard radiation thermometer should be returned to LAND every 1 to 3 years for recertification. UKAS Certificates of Calibration are available from Land Infrared, U.K. Certificates of calibration traceable to N.I.S.T. are available from Land Infrared, U.S.A.

8.3 Storage and transportation case

A custom built aluminium storage and transportation case is available as an optional extra. Use of this case is recommended.

9.0 EUROTHERM TEMPERATURE CONTROLLER

9.1 User Guide

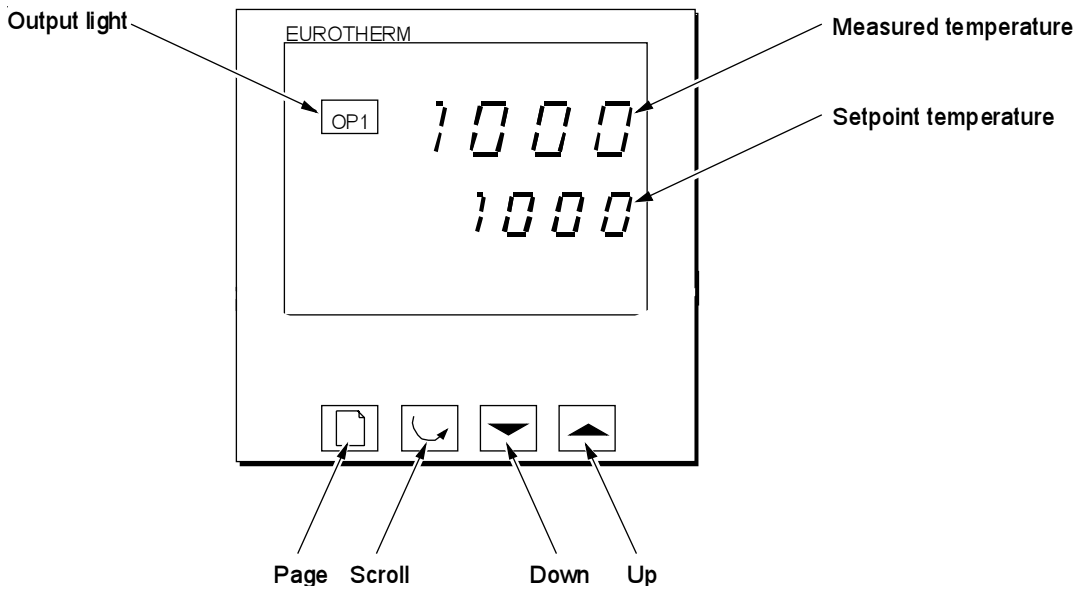

Fig. 3 Eurotherm Controller - front panel controls

CA970253/a

When switched on, the controller lights up, goes through a short test routine, and then displays the measured temperature and starts to control. The output light glows or flashes as heating occurs. The **Page** key allows access to parameter lists within the controller; most lists and parameters are hidden and cannot be accessed by the operator (they contain factory-set parameters which should not be changed). A single press of the page key displays the temperature units, normally set to °C; further presses reveal the lists indicated in the navigation diagram, Fig.4. The **Scroll** key allows access to the parameters within a list. A single press displays the temperature units; further presses reveal the parameters in the current list indicated in the Navigation Diagram. Some parameters are display-only; others may be altered by the operator. To return to the Home list at any time, press the Page and Scroll keys simultaneously, or wait for 45 seconds. The **Up** and **Down** keys are used to alter the setpoint or other parameter values.

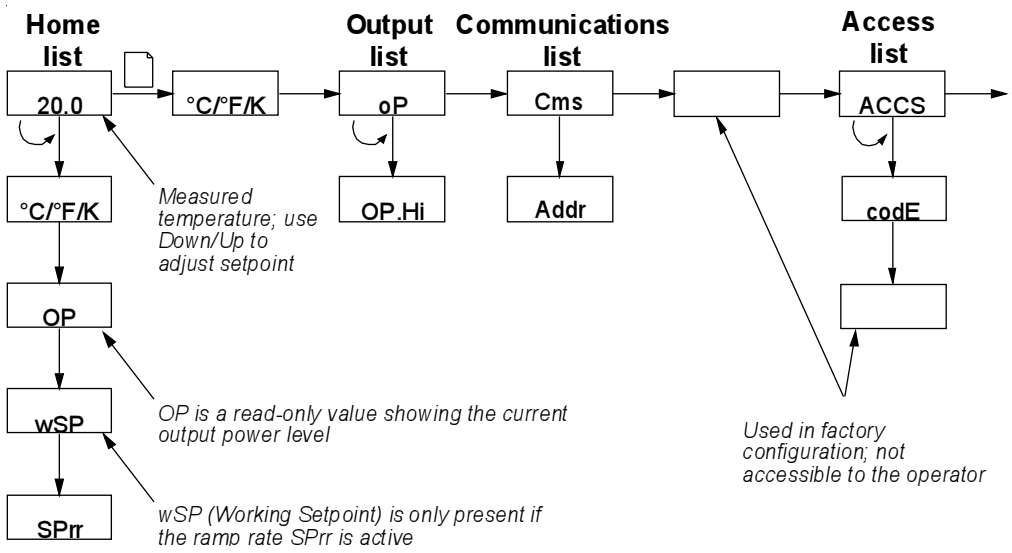

Fig. 4 Eurotherm Controller - navigation diagram

CA970281/a

9.2 Altering the Setpoint

(i) Press either the **Down** or **Up** key once to display the setpoint.

(ii) Use the **Down** or **Up** key to adjust the setpoint value.

The display returns to the measured temperature when no key is pressed for 0.5 seconds.

9.3 Altering the Ramp Rate

(i) Press the **Scroll** key until the legend *SPrr* (SetPoint ramp rate) is displayed.

(ii) Use the **Down** or **Up** key to adjust the ramp rate value.

The ramp rate sets the maximum rate of heating or cooling in degrees per minute. A value of *OFF* cancels the ramp rate, allowing heating and cooling at the maximum rate.

9.4 Altering the Power Limit (when applicable)

(i) Press the **Page** key until *oP* (output list) is displayed.

(ii) Press the **Scroll** key until *OP.Hi* (Output High) is displayed.

(iii) Press the **Down** key once to display the value of *OP.Hi* ***and write down the value.***

WARNING

Do not increase the value without correct calculation; the furnace elements or wiring could burn out.

(iv) To alter the value, the **Down** or **Up** key. Do not set the value to zero; this will prevent the furnace from heating.

9.5 °C to °F conversion

To change the controller from °C to °F operation, proceed as follows:

(i) Depress both the **Up** and **Down** keys whilst turning on the instrument switch until the controller displays *ConF*.

(ii) Use the **Up** or **Down** key to change the security configuration number to *45*.

(iii) Leave the display at this setting for a few seconds until *PASS* is displayed.

(iv) Press the **Page** key repeatedly until *InSt Conf* is displayed.

(v) Press the parameter key to display *Unit* and use the **Up** or **Down** keys to change from °C to °F (other units are K and none).

(vi) Press the **Page** key repeatedly until Exit *(E=It)* is displayed.

(vii) Use the **Up** key to select *Yes*.

(viii) Leave the controller for a few moments until it reverts to the normal display.

The temperature setting will now be made in the new units selected. All temperature limits and PID parameters are resized automatically to suit the new units.

WARNING

Do not alter any other parameters

9.6 Altering the communication address

(i) Press the page key until cmS is displayed.
(ii) Press the scroll key until Addr (address) is displayed.
(iii) To alter the value press the up or down key.

The display returns to the measured temperature when no key is pressed for 45 seconds.