LAND
infrared

Landcal Blackbody Source

Type P1600B

Operating Instructions

Land Infrared
Dronfield
S18 1DJ
England
Telephone: (01246) 417691
Facsimile: (01246) 410585
Email: infrared.sales@landinst.com

Land Infrared
10 Friends Lane
Newtown, PA 18940-1804
U.S.A.
Telephone: (215) 504 -8000
Facsimile: (215) 504-0879
Email: irsales@landinstruments.net

© Land Infrared, 2001

Publication Nº: CA198036
Issue B/0801

SAFETY INFORMATION

This product complies with current European directives relating to electromagnetic compatibility and safety (EMC directive 89/336/EEC; Low voltage directive 73/23/EEC).

EN 61010-1 Symbol identification

Symbol	Publication	Description
	IEC 417, Nº 5031	Direct current
	IEC 417, Nº 5032	Alternating current
	IEC 417, Nº 5033	Both direct and alternating current
3	IEC 617-2, Nº 02-02-06	Three-phase alternating current
	IEC 417, Nº 5017	Earth (ground) terminal
	IEC 417, Nº 5019	Protective conductor terminal
	IEC 417, Nº 5020	Frame or chassis terminal
	IEC 417, Nº 5021	Equipotentiality
	IEC 417, Nº 5007	On (Supply)
	IEC 417, Nº 5008	Off (Supply)
	IEC 417, Nº 5172	Equipment protected throughout by double insulation or reinforced insulation (equivalent to Class II of IEC 536)
	ISO 3864, Nº B.3.6	Caution, risk of electric shock
	ISO 3864, Nº B.3.1	Caution
	BS EN 100015	Observe precautions for handling electrostatic discharge sensitive devices
	BS EN 60825: 1992	Warning, laser radiation
		Warning, hot surface

Contents

1.0 LANDCAL BLACKBODY SOURCE TYPE P1600B

1.1 Introduction

The LANDCAL Blackbody Source type P1600B is designed for the testing and precise calibration of LAND Radiation Thermometers at temperatures from 600 to 1600°C (1100 to 2900°F).

The source is a primary standard black body for the high precision calibration of radiation thermometers. When the set point temperature is reached, the output from the thermometer under test is compared with the temperature of the source, as measured by an optional Platinum thermocouple, whose calibration is traceable to National Standards.

When used in conjunction with the Platinum thermocouple, which is supplied complete with a UKAS (United Kingdom Accreditation Service) calibration certificate, high precision is obtained. Alternatively, the source can be used in three other ways.

(i) If traceability to National Standards is required to a larger value of uncertainty, a UKAS certificate for the source can be supplied. The relationship between the indicated temperature on the controller and the radiance temperature, as measured by a secondary standard radiation thermometer, is reported.

(ii) The temperature of the source can be measured by using a radiation thermometer of traceable calibration. This method of calibration can be described as calibration by comparison with a standard radiation thermometer. This method of calibration usually results in the most accurate as errors due to temperature gradients and non-black body conditions are eliminated.

(iii) If traceability to National Standards is not required, the source can be used without any certification. From previous work the temperature, as shown on the controller indication, has been found to agree with the radiance temperature to within ±20°C (±40°F).

To simplify the lining up of LAND fixed installation radiation thermometers, an optical bench assembly is offered as an optional extra.

Uniform temperature conditions are achieved along the length of the cavity which mean the source can also be used for the calibration of thermocouples by the comparison method.

1.2 Safety

Every effort has been made during the design and manufacture of this furnace to ensure that it meets National and International standards of product safety. However great care should be shown by the user at all times when operating and maintaining high power furnaces which are capable of achieving high temperatures.

WARNING

To avoid the possibility of electric shock, never expose the elements, terminals or other electrical components with the furnace connected to the mains supply. After completion of a repair, replace all safety plates before switching on the furnace.

To avoid the possibility of burns never attempt to dismantle the furnace until it has cooled to a safe temperature. This may involve an overnight wait.

This furnace contains no asbestos. The alumina-silicate (ceramic fibre) materials used in this furnace release dust when disturbed which may, in some individuals, be an irritant to the skin, nose and throat.

SAFETY NOTE - REFRACTORY FIBROUS INSULATION

This furnace contains refractory fibres in it's thermal insulation. These materials may be in the form of fibre blanket or felt, vacuum formed board or shapes, mineral wool slab or loose fill fibre.

Normal use of the furnace does not result in any significant level of airborne dust from these materials, but much higher levels may be encountered during maintenance or repair.

Whilst there is no evidence of any long term health hazards, we strongly recommend that safety precautions are taken whenever the materials are handled.

Exposure to dust from fibre which has been used at high temperatures may cause respiratory disease.

When handling fibre, always use an approved mask, eye protection, gloves and long sleeved clothing.

Avoid breaking up waste material. Dispose of waste fibre in sealed containers.

After handling, rinse exposed skin with water before washing gently with soap (not detergent). Wash work clothing separately.

Before commencing any major repairs, we recommend reference to the European Ceramic Fibre Industry Association Bulletin Nº 11 and UK Health and Safety Executive Guidance Note EH46.

We can provide further information on request. Alternatively, our Service Department can quote for any repairs to be carried out, either at your premises or at Land Infrared.

2.0 DESCRIPTION

The LANDCAL P1600B comprises a cylindrical, refractory closed end tube (cavity) approximately 300mm (12.0in) long with an internal diameter of 50mm (2.0in). The cavity is cast from silicon carbide and the closed end is angled at 120° to increase the emissivity value.

The cavity is placed horizontally in a furnace heated by 6 silicon carbide heating elements running from end to end of the furnace. The temperature of the elements is measured by a Platinum thermocouple and controlled using a digital PID controller with negligible short term drift.

A standard Platinum thermocouple possessing a traceable (such as UKAS) certificate is inserted into the cavity from the rear of the furnace and used to determine the true temperature. A second certificated thermocouple may be supplied and when inserted into the cavity from the front can be used to determine temperature gradients along the cavity.

Fig.1 LANDCAL Blackbody Source Type P1600B

CA970273

3.0 SPECIFICATION

Maximum working temperature:	1600°C (2900°F)
Recommended temperature range:	600 to 1500°C (1100 to 2700°F)
Heating rate:	2.5 hours to 1400°C (2550°F)
Stability:	With the source controlling at temperature, the radiance temperature will vary by less than ±1.5K over a 30 minute period
Radiation cavity	
Material:	Silicon Carbide
Inner diameter:	50mm (2.0in) approx.
Internal length:	300mm (12.0in)
Sighting extension tube:	Length: 140mm (4.0in)
	Outer diameter: 48mm (1.9in)
	Inner diameter: 38mm (1.5in)
Emissivity:	0.998
Resistance heating element(s):	6 off SiC 151/356/20/25.4/7.4 Part Nº 135.017
Control thermocouple type: (Master and overtemperature)	Pt 13% Rh/Pt (Type R). 280mm long. Wire diameter 0.35mm. Twin bore insulation with end 60mm insulated with fish spine beads. This fits into an Alumina sheath of 6mm id, 10mm od and length of 225mm. If the thermocouple is replaced the sheath should also be replaced.
Controller	
Master:	Eurotherm 2216 or 2416 with RS 232 serial interface
Over temperature:	Eurotherm 2132
Electrical supply:	Single phase, 220/240V a.c. 50 to 60 Hz Part No. 135.194
	Three phase, 4 wire, 415V a.c. Part No. 135.195
	Three phase, 4 wire, 380V a.c. Part No. 135.196
Measuring thermocouple (if supplied)	
Type:	B(6/30) or R(0/13) or S(0/10)
Length:	600mm (23.6in)
Sheath:	8 x 5 x 600mm
Overall dimensions	
Length:	780mm (30.7in)
Width:	570mm (22.4in)
Height:	750mm (29.5in)
Bench to tube centre height:	430mm (16.9in)
Weight Nett:	70kg (155lb)
Gross:	102kg (225lb)

The input a.c. power supply required for the particular furnace is specified on the furnace identity plate.

Mains supply requirements:	For single phase operation, 47 amps ≡ 11.3kW For 3 phase operation, 16 amps per phase = 3.8 kW per phase
Power consumption:	Furnace controller fitted with power turndown (see Section 9.2.1) so it will not draw maximum current available. For single phase operation maximum consumption will be 7.0kW. For 3 phase operation maximum consumption will be 2.3kW per phase.

4.0 ELECTRICAL SUPPLY DETAILS

4.1 Introduction

A suitable electrical supply for the furnace is required. The furnace is supplied wired for the type of supply as ordered by the customer. With only a small amount of re-wiring it is possible to use this furnace with other supply voltage configurations. See Section 4.5 for details.

The furnace is supplied without a mains cable. The specification for a suitable cable is dependant on the type of supply. A suitable cable size is as follows:

a) For use with single phase, 208 to 240V (up to 50A rating):
PVC insulated 6 x 16mm² core. Fuse supply @ 50A minimum.

b) For use with 3 phase plus neutral, 220 to 240V / 380 to 415V (up to 16A per phase):
PVC insulated 5 x 2.5mm² core. Fuse supply @ 16A per phase minimum.

c) For use with 3 phase delta, 208 to 240V (up to 32A per phase):
PVC insulated 4 x 6mm² core. Fuse supply @ 30A per phase minimum.

A supply cable is not fitted. A permanent connection to an appropriately fused and isolated supply must be made to the internal terminals as shown in Figs. 2 to 4. A cable strain relief clamp is provided inside the furnace, located close to the cable entry hole in the case. The supply point must be within reach of the operator and must incorporate either an isolated switch which operates on both conductors (single phase) or all live terminals (three phase), or a quickly removable plug. The supply must incorporate an earth (ground).

4.2 Terminal connection diagrams

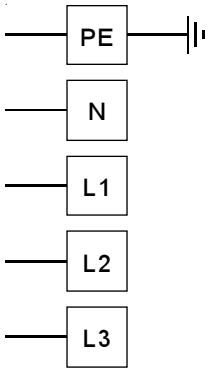

Fig. 2 Terminal connection diagram for three phase star with neutral CA970274B

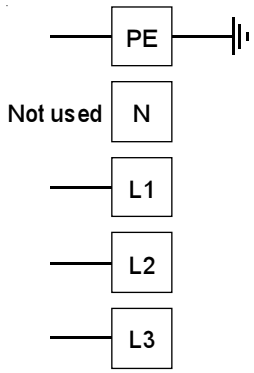

Fig. 3 Terminal connection diagram for three phase delta without neutral CA970275B

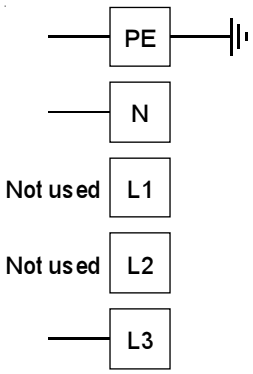

Fig. 4 Terminal connection diagram for single phase CA970276B

4.3 Fuses

F1	Mains fuses	32mm x 5mm x 16A
F2	Instrument circuit fuses	20mm x 5mm x 2A

4.4 Wiring diagram

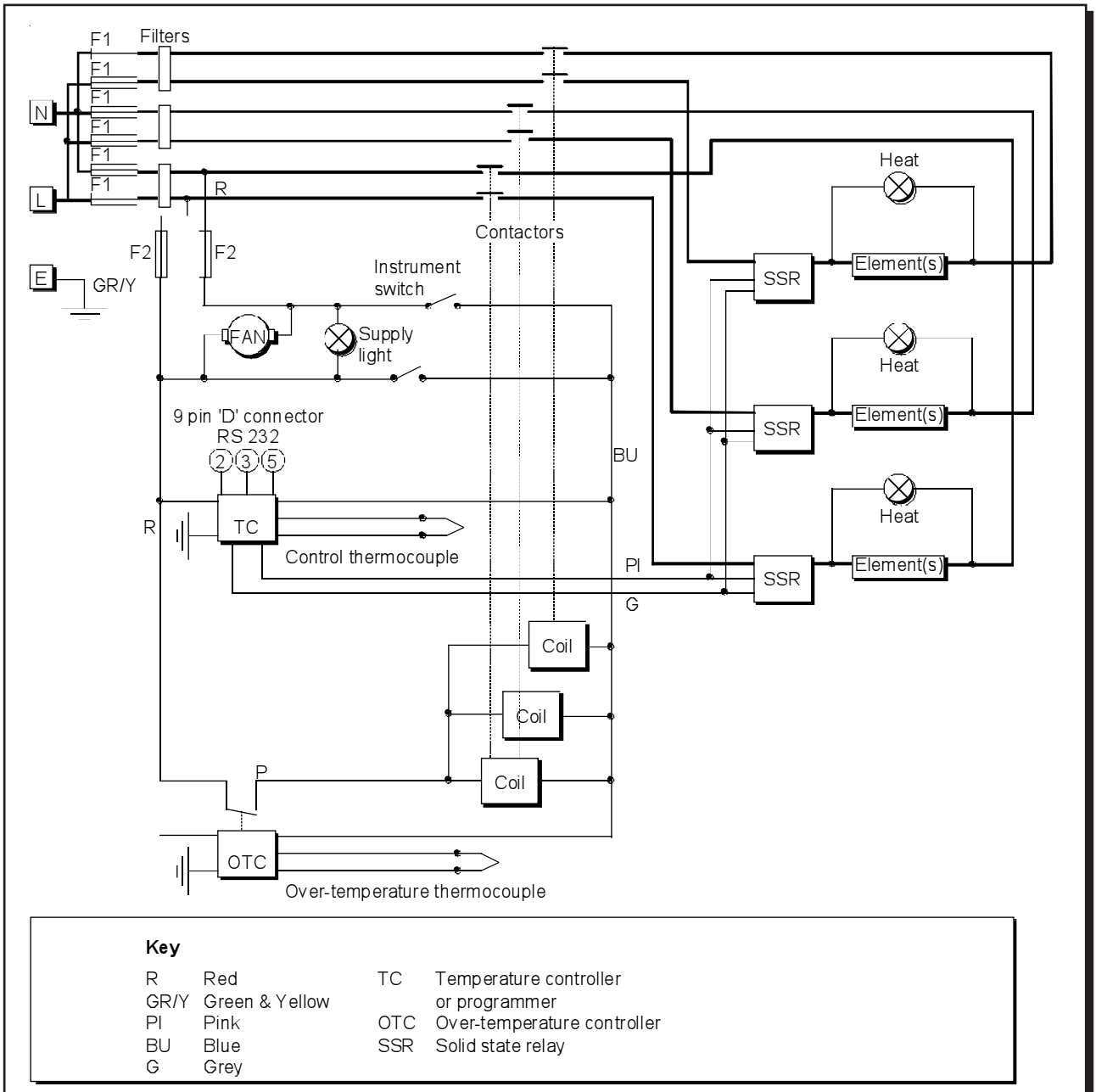

Fig. 5 LANDCAL Blackbody Source Type P1600B wiring diagram CA970279

4.5 Changing the Wiring

This furnace is wired internally in such a way that it can be altered by the customer between the following supply voltages:

1) 3-phase star configuration with neutral in the range 380/220 volts to 415/240 volts.
2) 3-phase delta configuration without neutral in the range 208 to 240 volts.
3) Single phase in the range 208 to 240 volts.

The wiring alterations are made entirely between the terminal blocks to which the supply cable is connected and the fuses. To access the terminal area, remove the panel adjacent to the cable entry point. Disconnect the link wires and reconnect as required as shown in Figs 6 to 8.

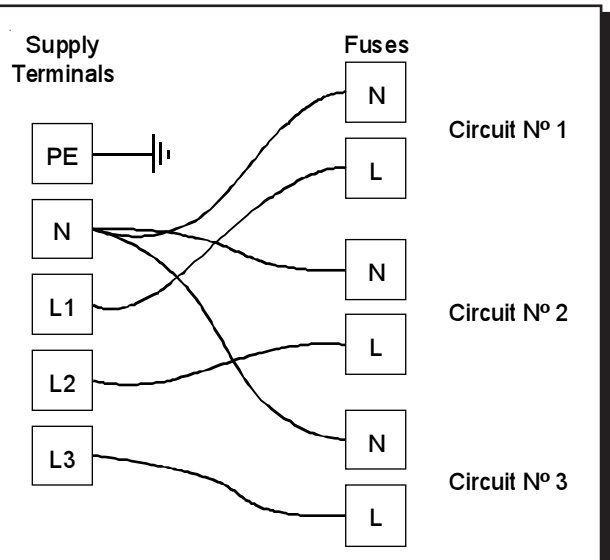

Fig. 6 Internal terminal connections three phase star with neutral CA990189B

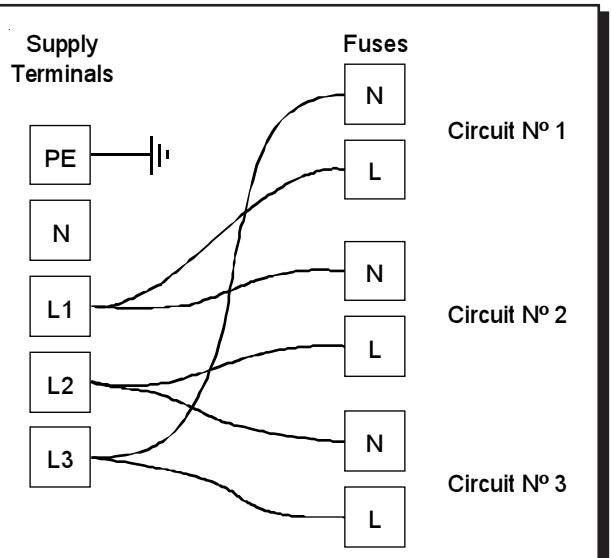

Fig. 7 Internal terminal connections three phase delta without neutral CA990190B

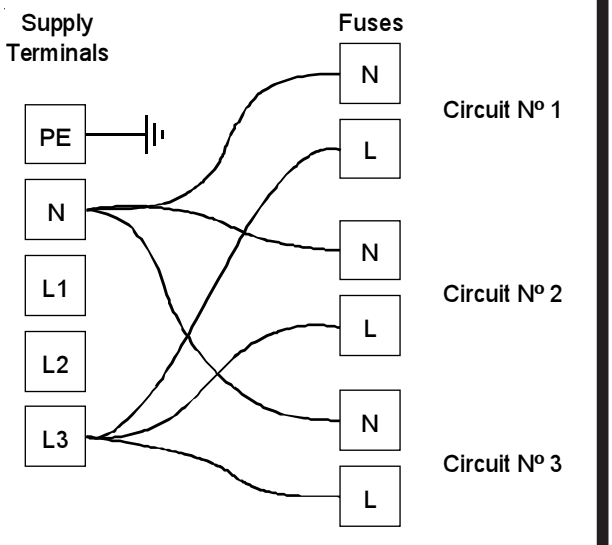

Fig. 8 Internal terminal connections single phase CA990191B

4.6 Power limit setting

The power limit setting (Op.Hi) of the Eurotherm control instrument must be set as shown in the table below (See also Fig.16, Section 11.0):

Supply voltage (V)	200	**208**	220/380	**230/400**	240/415
Op.Hi. Setting	86	**80**	71	**65**	60

If the supply voltage is specified at the time of ordering, the unit will be shipped with the appropriate setting.

5.0 COMMISSIONING

5.1 Inspection on Receipt

Physically examine all items for any damage that may have occurred during transit. Check the contents against the packing note.

If any items have been damaged in transit, this should be reported to the carrier and to the supplier immediately, BUT DO NOT RETURN damaged items until the carrier has considered a claim. Save the packing with the damaged article for inspection by the carrier.

5.2 Furnace assembly

The following paragraphs describe the step by step procedure to prepare the furnace for switch on. See also Fig. 11.

To minimise the risk of damage to the furnace during transit, the target cavity together with alumina sighting tube, ceramic fibre paper and six silicon carbide heating elements are supplied separately. If ordered, the measuring thermocouple(s) and thermocouple sheath(s) are also supplied separately.

To fit these items:

(i) Remove the front panel complete with the aluminium aperture plate.

(ii) Remove the exposed stainless steel plate by unscrewing the four equally spaced self tapping screws.

The ceramic tube in the back of the furnace chamber supports the narrower end of the cavity.

(iii) Insert the cavity so that the shortest of the four grooves in the outside diameter is uppermost. The front edge should now be level with the second layer of insulation. A clean rod or tube approximately 1.0m (39.4in) long may be placed inside the cavity to hold it horizontally whilst sliding it into position.

(iv) Use the thermocouple sheath to ensure that the top groove in the cavity aligns with the measuring thermocouple hole.

(v) Coil up one of the strips of ceramic fibre paper and place it just outside the mouth of the target to make a sleeve for the ceramic sighting tube. Leave about 3mm (1/8 inch) projecting from the target and with finger pressure flare out this edge of the sleeve to make it easier to insert the sighting tube.

This sleeve of fibrous material is needed to accommodate differential expansion between the sighting tube and the target.

(vi) Gently push the sighting tube about 20mm (0.75in) into the sleeve. Avoid disturbing the sleeve by rotating the tube as you push. The source will operate satisfactorily without the sighting tube in place.

(vii) Replace the insulated stainless steel plate and the front panel.

(viii) Remove the rear panel to gain access to the element connections.

(ix) Carefully insert the elements into the furnace ensuring that they locate into the recesses at the front. Extreme care should be taken not to strain the elements as they are very fragile. To avoid overheating of the element/ braid connection, each element is supplied fitted with 2 off insulating rings at the cold end of the element.

(x) Attach the electrical connections as shown in Fig. 12.

NOTE

All elements are marked with current ratings in the region 20 to 30 amps. The order in which they are installed is not critical. However, to maximise element life, the 3 circuits each having 2 elements must be matched so that the amp rating per circuit is similar.

For example, if the current ratings of the 6 elements were 22, 23, 24, 25, 26, 27 amp then the 3 circuits would be:

22 + 27 = 49 amp
23 + 26 = 49 amp
24 + 25 = 49 amp

(xi) Replace the back panel.

(xii) Connect the furnace to the mains supply as described in Section 4.1.

(xiii) Place the thermocouple in the measuring hole from the rear of the furnace. This should be done before the furnace is switched on. Only remove this thermocouple when the furnace has been switched off.

(xiv) Position the furnace where it is to be used.

(xv) This furnace is designed for bench mounted operation and all unnecessary moving of the source should be avoided.

WARNING

To avoid the possibility of electric shock, never attempt to move the furnace or expose the elements or terminals with the furnace connected to the mains supply.

To avoid the possibility of burns never attempt to move or dismantle the furnace until it has cooled to a safe temperature. This may involve an overnight wait.

To avoid the possibility of damage to the elements or insulation do not move the furnace when hot. Allow the furnace to cool to a safe temperature then remove the elements and target. The furnace can now be moved to a different location.

5.3 Heating up the furnace from cold

(i) When power is connected, the fluorescent indicator panel lights up and displays the measured value and starts to control. The output light glows or flashes when heating occurs.

(ii) To modify the set point, press the ‘Up’ or ‘Down’ button until the required value is obtained (See Section 11.0).

NOTE

All other control parameters are factory set and locked. For correct operation, it is not necessary to adjust any other parameter. See Section 11 for further details.

5.4 Overtemperature controller using Eurotherm model 2132

Refer to Fig. 9. When switched on, the controller lights up, goes through a short test routine, and then displays the Overtemperature Set Point.

The **Page** key allows access to parameter lists within the controller; most lists and parameters are hidden and cannot be accessed by the operator (they contain factory-set parameters which should not be changed). A single press of the page key displays the temperature units, normally set to °C. Repeated presses reveal the lists indicated in the navigation diagram (Fig. 10).

The **Scroll** key allows access to the parameters within a list. A single press from the Home list displays the temperature units. Repeated presses reveal the parameters in the current list indicated in the navigation diagram, see Fig. 10. Some parameters are display only; others may be altered by the operator. To return to the Home list at any time, press Page and Scroll together, or wait for 45 seconds.

The **Down** and **Up** keys are used to alter the setpoint or other parameter values.

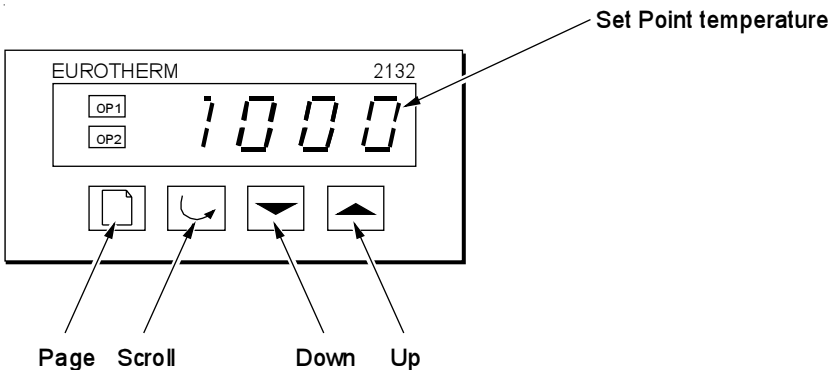

Fig. 9 Eurotherm 2132 control panel

CA970280

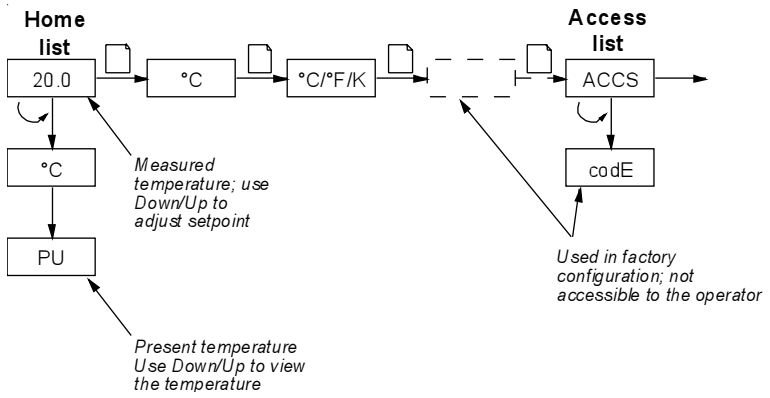

Fig. 10 Eurotherm 2132 Controller - navigation diagram

CA970254

5.4.1 Basic Operation

Use **Down** and **Up** to alter the overtemperature setpoint. This should normally be set a little above the maximum working temperature (say 15°C above). The unit is supplied at 15°C above the furnace maximum working temperature.

Press **Scroll** to view the present temperature as seen by the overtemperature controller. Press it twice, because the first press shows the temperature units (°C).

5.4.2 Overtemperature alarm

If an overtemperature condition occurs, the OP2 indicator flashes, and an alarm message 2FSH also flashes, alternating with the setpoint. Power to the heating elements is disconnected.

5.4.3 Resetting the Overtemperature alarm

To acknowledge the alarm press **Scroll** and **Page** together.

If the alarm is acknowledged while there is still an overtemperature condition, the OP2 indicator stops flashing but continues to glow. The 2FSH alarm continues to flash, and normal operation is not resumed if the temperature subsequently drops.

If the alarm is acknowledged when the temperature has dropped (or after the overtemperature setpoint has been raised) such that the overtemperature condition no longer exists, then the furnace resumes normal operation.

5.4.4 Sensor Break

The overtemperature cut-out system also operates if the overtemperature control thermocouple breaks or becomes disconnected. The message S.br flashes instead of 2FSH.

5.5 Using the RS 232 serial interface port

The RS232 option is supplied and the furnace is fitted with one subminiature D-socket connected to the controller communication module. RS232 is suitable for direct connection to a personal computer (PC), using a “cross-over” cable as follows (the linked pins at the computer end are recommended but may not be necessary). The cable is usually 9-pin at the furnace end and 9-pin at the computer, but other alternatives are shown in parentheses.

Furnace end of cable - female	**RS232 Cable: furnace to PC**	Computer end of cable - male		
	9-pin	**9-pin**	(25-pin)	
Tx	**3**	**3**	(2)	**Tx**
Rx	**2**	**2**	(3)	**Rx**
Com	**5**	**5**	(7)	**Com**
		7,8	(4,5)	**Link together**
		1,4,6	(6,8,20)	**Link together**

The furnace is shipped with the RS232 communications protocol set to “EIBISYNC”, with the baud rate set to 9600 and no delay. The communication address is set to 1.

The source must only be connected and used with a PC by a person who understands how the serial communications function operates. If further information is required, contact your local EUROTHERM agent and request a copy of the Series 2000 Communication handbook - Publication Nº HA 026230.

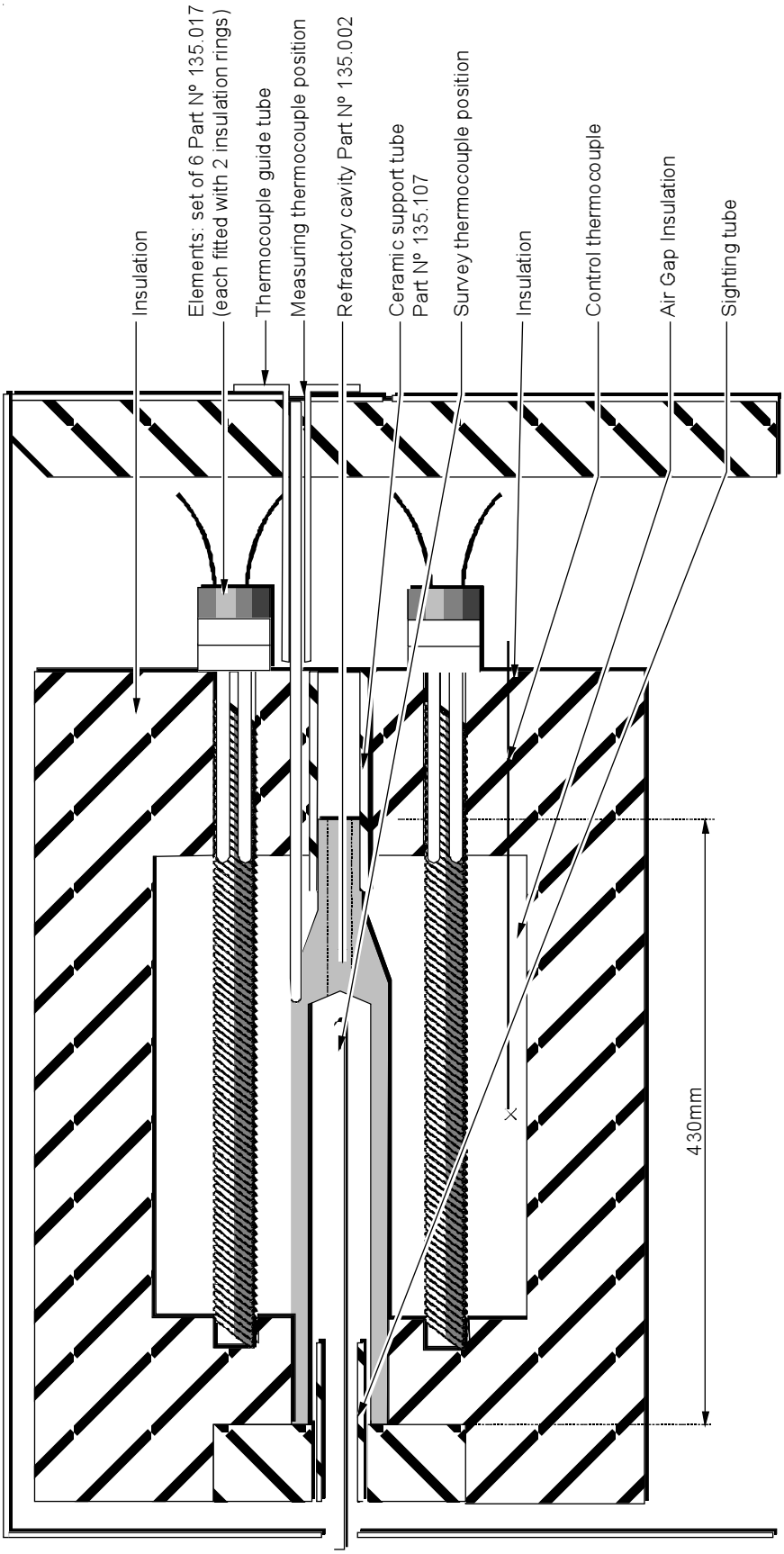

Fig. 11 Furnace assembly drawing for the Landcal Blackbody Source Type P1600B

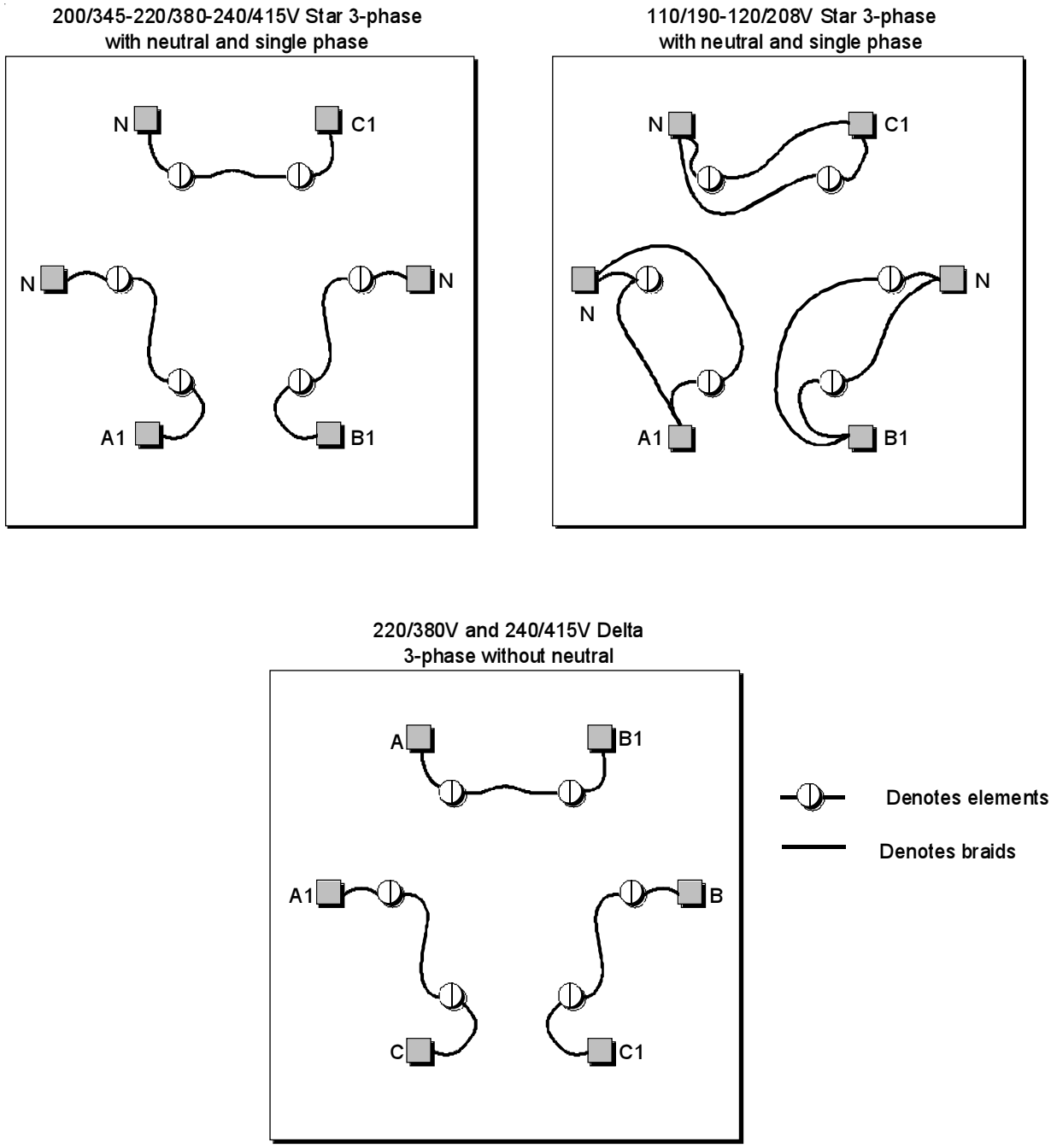

To avoid overheating of the element/braid connection, each element is supplied fitted with 2 off insulation rings at the cold end of the element.

Fig. 12 Silicon Carbide element placement and connection
Single ended, double spiral Type

CA970283

6.0 USING THE FURNACE

6.1 Introduction

The furnace has been designed to create an enclosure of uniform temperature, ideal for the calibration of radiation thermometers or thermocouples. The cone point of the refractory cavity target block installed in the furnace is placed in the area of minimum gradients within the furnace. When calibrating radiation thermometers, the target size requirements of the thermometer should, whenever possible, be fulfilled by the cone. If the thermometer views the walls of the target block, results of greater uncertainty will be achieved. When calibrating thermocouples, the hot junctions must be inserted into the cone area and the furnace aperture plugged with ceramic fibre to reduce conduction and convection losses.

6.2 Measuring thermocouple

Provision has been made to measure the temperature of the target block using a Platinum thermocouple, which can be inserted from the rear of the furnace into the target. A 600mm (24.0in) long recrystallised Alumina sheath must always be used to protect the thermocouple from mechanical damage and contamination. When placed in the measuring position in the furnace, the thermocouple junction lies in the same plane as the cone point, but is approximately 20mm (0.75in) above. The temperature of the block, as measured by the thermocouple, agrees with the cone point radiance temperature to within the uncertainty of the thermocouple.

The output from the thermocouple must be measured via a cold junction enclosure of known temperature to an indicator or digital voltmeter having a resolution of 0.1°C.

This is the recommended way to obtain the true temperature of the target cavity. The temperature indication on the controller must not be used as an accurate measurement of target cavity temperature.

6.3 Survey thermocouple

An assessment of the temperature gradients down the length of the target can be carried out. This should only be necessary if doubt exists about the condition of the furnace. The temperature gradients within the furnace are dependant on control temperature, so if the furnace is used over a large temperature span, several assessments at different temperatures may be required.

To carry out an assessment of the temperature gradients along the length of the target, a thermocouple must be inserted down the open end of the furnace until it is almost touching the cone point. Refer to Fig. 11 for assistance with the position of the thermocouple.

After the thermocouple has achieved thermal stability, measure the temperature of the furnace with both the measuring and survey thermocouples. Withdraw the survey thermocouple (leave the sheath in position) by 20mm (0.75in), wait until the output stabilises and again measure the two temperatures. Repeat for a series of 5 to 10 survey thermocouple immersion depths, i.e. from fully inserted to 100 to 200mm (4 to 8in) back from full.

To determine the magnitude of the gradients, subtract the survey thermocouple temperature from the measuring thermocouple temperature. To show the gradients, a graph can be plotted of gradient against position, as shown in Fig. 13.

6.4 Control thermocouple

The thermocouple which controls the furnace temperature is situated close to the furnace heating elements, which will be at a higher temperature than the target cavity. The difference between controller set point temperature and target cavity temperature can be as high as 20°C (40°F) at 1500°C (2700°F). In these cases, if a target temperature of 1500°C (2700°F) is required, it is necessary to adjust the controller setpoint to 1520°C (2740°F).

The temperature indication on the controller must not be used as an accurate measurement of target cavity temperature.

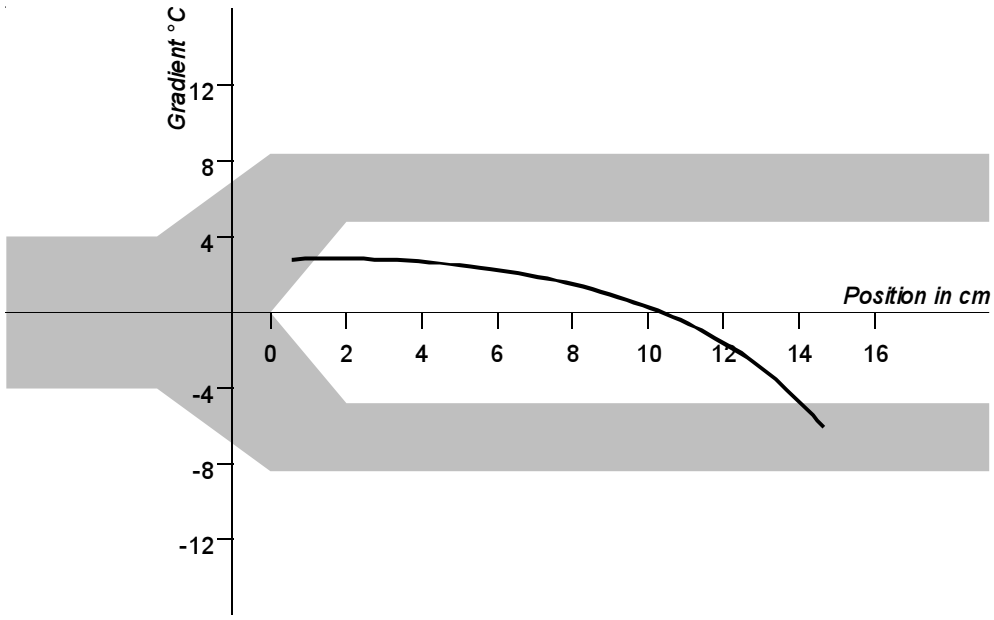

Fig. 13 Typical gradients of a LANDCAL Blackbody Source Type P1600B furnace at 1200°C (2200°F)

CA970284

7.0 CALIBRATION OF RADIATION THERMOMETERS

7.1 Preparation

The furnace control setting will usually be the normal working temperature of the thermometer to be tested.

The target temperature is that indicated by the standard thermocouple in the 'measuring' position.

A convenient method of holding a fixed system radiation thermometer is to mount a holder horizontally onto an optical bench assembly having vertical and transverse vernier adjustments. Portable radiation thermometers are usually hand held.

Position the holder on the optical bench to obtain the desired distance between target and thermometer. Adjust the vernier screws to align the holder correctly.

To reduce unnecessary heating from furnace radiation, it is recommended that a heat shield be placed between furnace and holder, and only removed during periods when outputs from the thermometers are being measured. Ensure that the shield is away from the sighting tube so that furnace conditions are not altered when it is removed.

7.2 Thermometer calibration

When soaked conditions have been obtained, place the thermometer in the holder, remove the heat shield and measure the thermometer output on the measuring apparatus. Immediately afterwards, measure the output from the 'measuring' thermocouple.

Refer to the relevant calibration tables to convert both outputs into temperature and compare these values.

7.3 Accuracy of calibration

The source has been designed for the accurate calibration of LAND radiation thermometers. The accuracy that can be achieved by using the source is dependent on:-

(i) The uncertainty of calibration and resolution of the measuring thermocouple
(ii) The emissivity of the source
(iii) The resolution of the thermometer under test

The uncertainty specified on the calibration certificate issued by the calibration laboratory will be a function of:-

(i) The capabilities of the calibration laboratory
(ii) The type of thermocouple under test
(iii) The temperature range covered

Values of ±1K (±2°F) up to 1100°C (2000°F) and ±2K (±4°F) over the range 1100°C to 1600°C (2000 to 2900°F) are typical for the uncertainty. A value of ±0.1K to ±1K (±0.2°F to ±2°F) must be specified for the resolution, depending on the type of measuring equipment used.

As the emissivity of the source is less than 1.00, the radiance temperature will be dependent on the wavelength of the thermometer under test. For example a furnace operating at 1000°C (1832°F) with emissivity of 1.00 will show a temperature of 1000°C (1832°F), for a thermometer having a silicon cell (wavelength = 1µm) detector, and a temperature of 1000°C (1832°F), for a thermometer having a pyroelectric (wavelength = 8 to 14µm) detector. However, a furnace operating with emissivity of 0.998 at 1000°C (1832°F) will show a temperature of 999.8°C (1831.6°F), for a thermometer having a silicon cell detector, and a radiance temperature of 998.5°C (1829.3°F), for a thermometer having a pyroelectric detector.

Most hand held thermometers and fixed installation thermometers, used in conjunction with an indicator, have a resolution of ±1K (±2°F). Fixed installation thermometers, whose output is measured on a digital voltmeter, will have a resolution of between ±0.1K and ±0.5K (±0.2°F and ±1.0°F).

To determine the best measurement capability, the uncertainty of each individual measurement component must be added together. Typical values at 1000°C are between ±3K and ±5K (±6°F and ±10°F).

7.4 Calibration procedures

When calibrating radiation thermometers, it is important to follow documented step-by-step procedures to ensure that specified calibration conditions, such as calibration distance, furnace temperature and aperture size are always met.

If you experience any difficulty in writing your own procedures, LAND Infrared are pleased to offer guidance as to which calibration conditions should be adopted for LAND products.

8.0 CALIBRATION OF THERMOCOUPLES

8.1 Introduction

Uniform temperature conditions are achieved along the length of the cavity, which allows the furnaces also to be used for the calibration of thermocouples by the comparison method. This method consists of comparing the thermocouple under test with a standard thermocouple, the calibration of which is traceable to National Standards.

As well as a uniform temperature source, basic equipment requirements are a set of standard thermocouples, a reference (cold junction) source and a digital voltmeter, for measuring the outputs from the thermocouples.

8.2 Thermocouple calibration

The test and standard thermocouples are placed in close proximity in the uniform temperature zone of the furnace. After allowing the thermocouples to soak at temperature, readings of the output are noted. Hence the test thermocouple has been directly compared with the standard.

9.0 MAINTENANCE

9.1 Introduction

(i) Always ensure that the furnace is disconnected from the electricity supply before any maintenance/ repair work is started.

(ii) Always ensure that the furnace has been allowed to cool to room temperature before any maintenance/ repair work is started.

(iii) After the completion of any furnace maintenance work, check the furnace for electrical safety before use.

9.2 Routine servicing

The source is fully tested and evaluated before supply and should give years of trouble free operation. No regular servicing or maintenance is required. The furnace outer surface may be cleaned with a damp cloth. Do not allow water to enter the case. Do not clean with organic solvents. In the unlikely event of a failure we recommend that the source is returned either to a LAND company direct or to one of the LAND distributors for repair. The instructions in the following sections provide information for the customer replacement of the heating elements, the replacement of the insulation cassette and the replacement of other consumable items. Adjustment of the power setting may be required from time to time.

9.3 Power adjustment

9.3.1 Power limit

The furnace control system incorporates electronic power limiting. Power is supplied to the elements in bursts of about 1/3 second duration. This prevents overheating of the elements. The 'power limit' is programmed into the furnace controller and may be calculated as a percentage as follows:

$$\text{power limit} = \frac{100 \times \text{target power} \times \text{ohms}}{\text{volts}^2}$$

where:

target power	is the wattage given on the furnace rating label
ohms	is the overall resistance (see example)
volts	is the live-neutral voltage (e.g. 240, not 415)

example:

3 phase furnace with 2 elements of 7.4Ω each in series per circuit (phase), running on 380/220V, with a target power of 7000W

ohms = 7.4 x 2/3 = 4.93
power limit = (100 x 7000 x 3)/(220 x 220) = 71%

9.3.2 Element ageing

Silicon carbide elements gradually increase in resistance with use, a process known as ageing. Their heating power reduces correspondingly. To ensure sufficient power to the furnace, it may be necessary to adjust the power limit, and, ultimately, to replace the elements.

If the furnace does not reach temperature, or is slow, measure the element resistances and calculate the required power limit using the method given above. If it exceeds 100%, the elements have too high a resistance and need replacing. The method of ascertaining and adjusting the power limit on the controller is given below.

Always record the actual setting when first making an adjustment. If new elements are fitted, return to the original setting, or, better, measure the new element resistances and recalculate.

9.4 Replacing the furnace elements

If it is necessary to replace an element due to breakage, follow the procedure outlined in Section 5.2 . After replacing the element, check that the connections are as shown in Fig. 12. It is advisable to replace all 6 elements if only one or two fail because new elements have a lower resistance than used ones which have aged. The elements are serial connected and the lower voltage drop across a new element will tend to cause premature failure of the remaining older elements. The aged elements can be saved and used for future element replacements.

9.5 Replacing the insulation cassette

9.5.1 Removing the old insulation cassette

(i) Remove the front and rear panels from the furnace case.

(ii) Make a note of the wiring sequence for the elements. Remove the element braids and carefully withdraw the elements. Store safely until required.

(iii) Make a note of the wiring sequence for the control thermocouples. Disconnect the thermocouples and carefully withdraw. Store safely until required.

(iv) Make a note of the wiring positions and wiring sequence of the element supply terminal blocks. Disconnect the wires from the terminal blocks on the rear of the insulation cassette.

(v) If installed, carefully withdraw the cavity from the insulation cassette. This is a reverse of the procedure defined in Sections 5.2 of the Operating Instructions.

(vi) Remove the insulation cassette support fixing screws from the supports to the furnace case.

(vii) Lift the insulation cassette out of the furnace case. Care will be required, as the insulation cassette is heavy.

(viii) Remove the insulation cassette supports from the old cassette outer case and fit to the new insulation case.

9.5.2. Installing the new insulation cassette

(i) Lift the new insulation cassette and support assembly into the furnace case. Secure into position using the fixing screws,

(ii) Re-connect the element supply wiring to the terminal blocks on the rear of the new insulation cassette in the positions previously noted.

(iii) Slide the control thermocouples into position and re-connect in the sequence previously noted.

(iv) Insert the cavity into the furnace by locating the narrowest part of the cavity (rear) into the ceramic tube in the back of the furnace. Full details are given in Section 5.2 of the Operating Instructions.

(v) Carefully fit the elements into the new insulation cassette ensuring that the elements are correctly located in the front support holes. To avoid overheating of the element/braid connection, each element is supplied fitted with two off insulation rings at the cold end of the element. This ring should fit closely to the rear of the insulation cassette.

(vi) Re-connect the element braids in the positions previously noted. The split line in the cold end of the element should be positioned vertically. Take care that the braids do not touch each other or any part of the insulation cassette. Ensure that the braids will be clear of the back panel when fitted.

(vii) Replace the front and rear panels onto the furnace case.

9.6 Replacing the control thermocouple

(i) Remove the rear panelfrom the furnace.

(ii) Disconnect the thermocouple from its terminal block. This may be easier if the terminal block is first unscrewed from the furnace body. Note if the terminal block is held away from the furnace body by porcelain spacers.

(iii) Release the screw which secures the thermocouple sheath.

(iv) Withdraw the sheath and shake out any fragments of broken thermocouple.

(v) Replace any porcelain spacers which were removed from behind the terminal block.

(vi) Connect the negative side of the thermocouple to the blue (or blue striped) wire of the compensating cable. (Some furnaces may be fitted with an earlier type of compensating cable. In this case the positive side of the thermocouple must be connected to the red wire).

9.7 Replacing current fuses

Access to internal fuses is by removal of the back panel.

9.8 Replacing the temperature controller

Ease apart the two lugs at the side. Grip the instrument and withdraw it from the sleeve. Push in the replacement.

Before handling the controller wear an anti-static wrist strap to avoid any possibility of damage by static electricity.

9.9 Replacing solid state relays

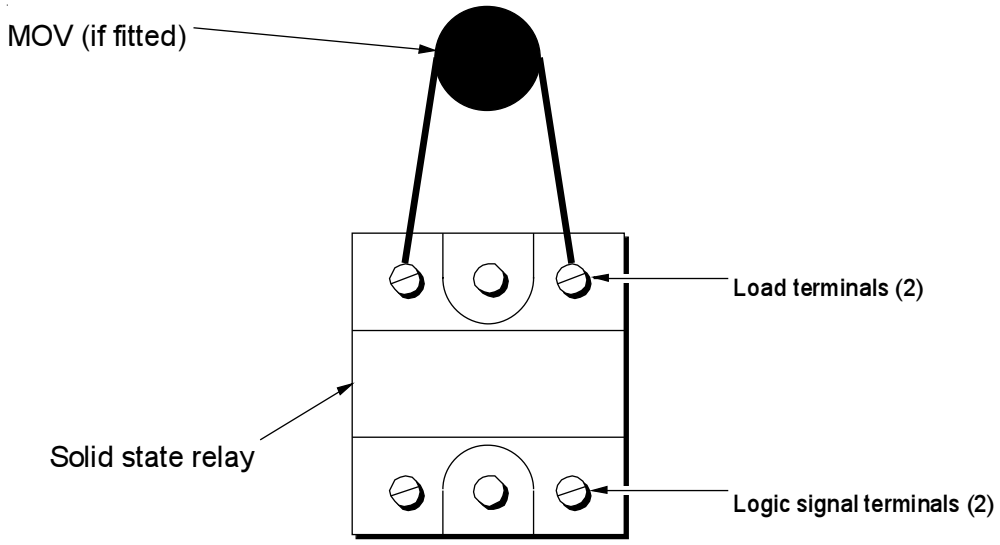

Fig. 14 Solid state relay connections

CA970270

(i) Disconnect the furnace from the electrical supply.

(ii) Remove the rear panel from the furnace or control cabinet and locate the solid state relay(s), removing any other panels necessary to give reasonable access to the relay(s).

(iii) Disconnect the four or five wires, noting their numbers and positions.

(iv) Remove the faulty relay and replace it with a new one, noting which way round to fit it.

Original relays are fitted with a thin layer of ‘off-white’ paste to give good heat transfer to the aluminium sheet. New relays are supplied with a heatsink 'pad'. All remnants of the old heatsink paste must be removed. The thin white heatsink pad must be fitted between the solid state relay and the plate to which it is mounted.

(v) Tighten the two fixing screws.

(vi) Refit the wires as noted in (iii) above. If the replacement solid state relay is supplied with a metal oxide varistor (MOV) it must be connected between the load terminals as shown in Fig. 14. It is not polarity dependent.

The MOV protects the SSR from short periods of excess volage. If the replacement SSR is supplied without an MOV this is because the MOV is built-in on later versions.

(vii) Replace the panels.

(viii) Reconnect the furnace to the electrical supply.

10.0 FAULT FINDING

10.1 Furnace does not heat up

(i)	The **HEAT** light is **ON** → working	The heating element has failed →	Check also that the SSR is correctly
(ii)	The **HEAT** light is **OFF** broken or	The controller shows a **very high temperature** or a code such as **S.Br** →	The thermocouple has has a wiring fault
	be	The controller shows a **low temperature** →	The door switch(es) (if fitted) may faulty or need adjustment
		→	The contactor (if fitted) may be faulty
	logic	→	The SSR could be failing to switch on due to internal failure, faulty wiring from the controller, or faulty controller
		There are no lights glowing on the controller →	The **SUPPLY** light is **ON** ↓ The controller may be faulty or not receiving a supply due to a faulty switch or a wiring fault
		→	The **SUPPLY** light is **OFF** ↓ Check the supply fuses and any fuses in the furnace control compartment

10.2 Furnace overheats

(i)	The **HEAT** light goes **OFF** with the instrument switch →	The controller shows a **very high temperature** →	The controller is faulty
	→ been	The controller shows a **low temperature** →	The thermocouple may have shorted out or may have been moved out of the heating chamber
		→	The thermocouple may have been mounted the wrong way round
		→	The controller may be faulty
(ii)	The **HEAT** light **does not go OFF** with the instrument switch →	The SSR has failed 'ON' →	Check for an accidental wiring fault which could have overloaded the SSR

11.0 EUROTHERM TEMPERATURE CONTROLLER

11.1 User Guide

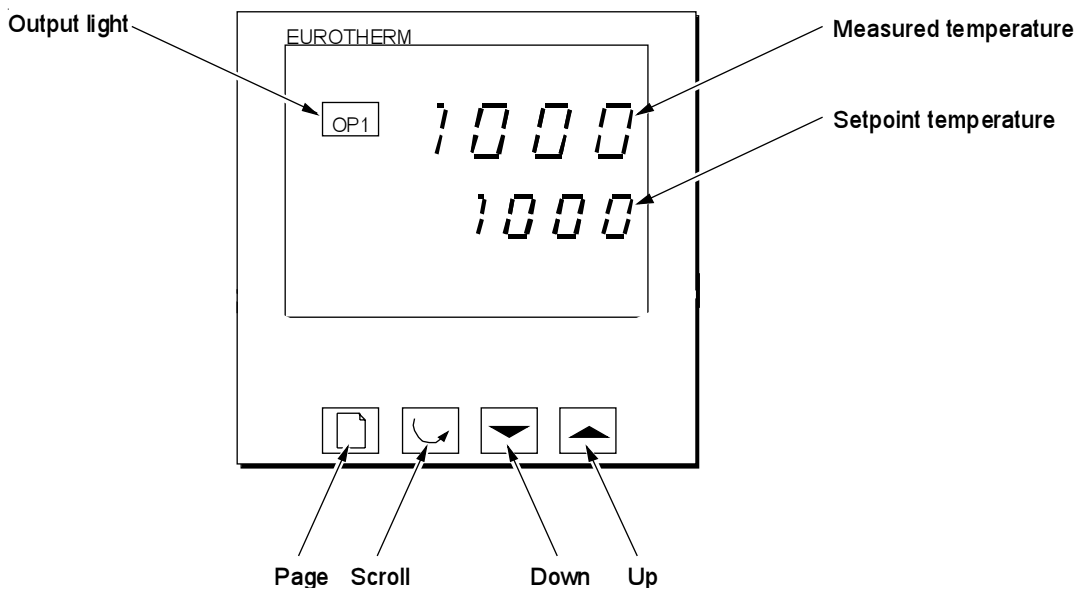

Fig. 15 Eurotherm Controller - front panel controls

CA970253/a

When switched on, the controller lights up, goes through a short test routine, and then displays the measured temperature and starts to control. The output light glows or flashes as heating occurs. The **Page** key allows access to parameter lists within the controller; most lists and parameters are hidden and cannot be accessed by the operator (they contain factory-set parameters which should not be changed). A single press of the page key displays the temperature units, normally set to °C; further presses reveal the lists indicated in the navigation diagram, Fig. 16. The **Scroll** key allows access to the parameters within a list. A single press displays the temperature units; further presses reveal the parameters in the current list indicated in the Navigation Diagram. Some parameters are display-only; others may be altered by the operator. To return to the Home list at any time, press the Page and Scroll keys simultaneously, or wait for 45 seconds. The **Up** and **Down** keys are used to alter the setpoint or other parameter values.

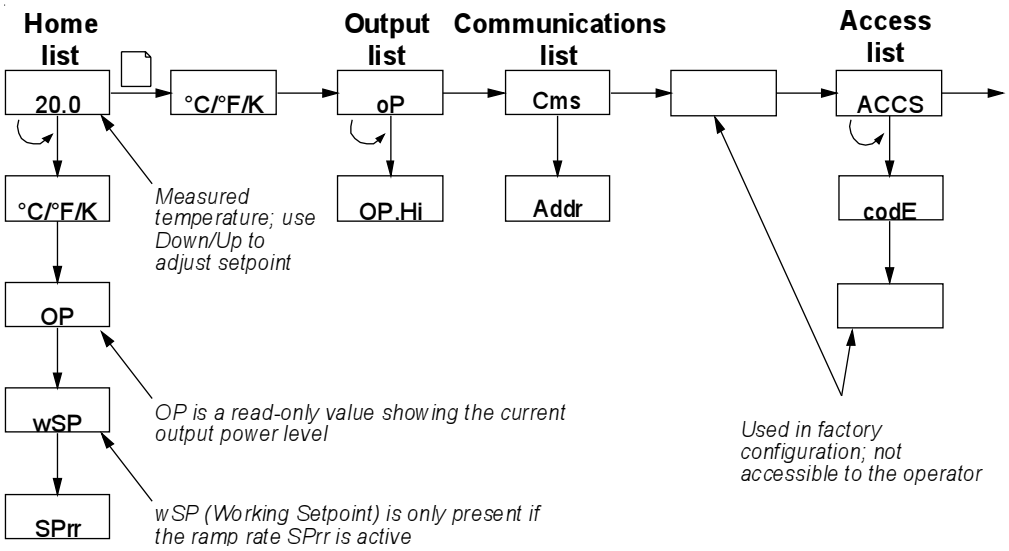

Fig. 16 Eurotherm Controller - navigation diagram

CA970281/a

11.2 Altering the Setpoint

(i) Press either the **Down** or **Up** key once to display the setpoint.

(ii) Use the **Down** or **Up** key to adjust the setpoint value.

The display returns to the measured temperature when no key is pressed for 0.5 seconds.

11.3 Altering the Ramp Rate

(i) Press the **Scroll** key until the legend *SPrr* (SetPoint ramp rate) is displayed.

(ii) Use the **Down** or **Up** key to adjust the ramp rate value.

The ramp rate sets the maximum rate of heating or cooling in degrees per minute. A value of *OFF* cancels the ramp rate, allowing heating and cooling at the maximum rate.

11.4 Altering the Power Limit (when applicable)

(i) Press the **Page** key until *oP* (output list) is displayed.

(ii) Press the **Scroll** key until *OP.Hi* (Output High) is displayed.

(iii) Press the **Down** key once to display the value of *OP.Hi* ***and write down the value.***

WARNING

Do not increase the value without correct calculation; the furnace elements or wiring could burn out.

(iv) To alter the value, the **Down** or **Up** key. Do not set the value to zero; this will prevent the furnace from heating.

11.5 °C to °F conversion

To change the controller from °C to °F operation, proceed as follows:

(i) Depress both the **Up** and **Down** keys whilst turning on the instrument switch until the controller displays *ConF*.

(ii) Use the **Up** or **Down** key to change the security configuration number to *45*.

(iii) Leave the display at this setting for a few seconds until *PASS* is displayed.

(iv) Press the **Page** key repeatedly until *InSt Conf* is displayed.

(v) Press the parameter key to display *Unit* and use the **Up** or **Down** keys to change from °C to °F (other units are K and none).

(vi) Press the **Page** key repeatedly until Exit *(E=It)* is displayed.

(vii) Use the **Up** key to select *Yes*.

(viii) Leave the controller for a few moments until it reverts to the normal display.

The temperature setting will now be made in the new units selected. All temperature limits and PID parameters are resized automatically to suit the new units.

WARNING

Do not alter any other paramters

11.6 Altering the communication address

(i) Press the page key until cmS is displayed.
(ii) Press the scroll key until Addr (address) is displayed.
(iii) To alter the value press the up or down key.

The display returns to the measured temperature when no key is pressed for 45 seconds.

12.0 SPARES AND ACCESSORIES

The spare parts listed in Table 2 are available for use with the Landcal Blackbody Source Type P1600B:

Description		Land Part Nº
Silicon carbide cavity		135.002
Set of 6 heating elements		135.017
Solid state relay		135.006
Measuring thermocouple, 0.6 metre. NAMAS	Type R	135.152
	Type S	135.153
	Type B	135.154
Positioning tube - RCA, 54 x 45 x 130mm long		135.107
Insluation cassette		135.019

Table 2 List of spare parts

The calibration accessories listed in Table 3 are available for use with the Landcal Blackbody Source Type P1600B:

Description	Land Part Nº
Optical bench calibration accessory * (0.5 metre long)	135.124
Optical bench calibration accessory * (1.0 metre long)	135.125
Optical bench calibration accessory * (2.0 metre long)	135.114
Land Fibroptic Thermometer holder kit	135.155
Land System 4 Thermometer holder kit	135.176

* Supplied complete with LAND thermometer jacket holder

Table 3 List of calibration accessories