LAND
infrared

Landcal Blackbody Source

Type P1200B

Operating Instructions

Land Infrared
Dronfield
Sheffield S18 6DJ
England
Telephone: (01246) 417691
Facsimile: (01246) 410585
Email: infrared.sales@landinst.com

Land Infrared
10 Friends Lane
Newtown, PA 18940-1804
U.S.A.
Telephone: (215) 504-8000
Facsimile: (215) 504-0879
Email: irsales@landinstruments.net

Publication Nº: PP970431
Part Nº: 198.035
Issue B/0801

SAFETY INFORMATION

This product complies with current European directives relating to electromagnetic compatibility and safety (EMC directive 89/336/EEC; Low voltage directive 73/23/EEC).

EN 61010-1 Symbol identification

Symbol	Publication	Description
	IEC 417, Nº 5031	Direct current
	IEC 417, Nº 5032	Alternating current
	IEC 417, Nº 5033	Both direct and alternating current
	IEC 617-2, Nº 02-02-06	Three-phase alternating current
	IEC 417, Nº 5017	Earth (ground) terminal
	IEC 417, Nº 5019	Protective conductor terminal
	IEC 417, Nº 5020	Frame or chassis terminal
	IEC 417, Nº 5021	Equipotentiality
	IEC 417, Nº 5007	On (Supply)
	IEC 417, Nº 5008	Off (Supply)
	IEC 417, Nº 5172	Equipment protected throughout by double insulation or reinforced insulation (equivalent to Class II of IEC 536)
	ISO 3864, Nº B.3.6	Caution, risk of electric shock
	ISO 3864, Nº B.3.1	Caution
	BS EN 100015	Observe precautions for handling electrostatic discharge sensitive devices
	BS EN 60825: 1992	Warning, laser radiation
		Warning, hot surface

Contents

1.0 INTRODUCTION

The LANDCAL Blackbody Source Type P1200B is designed for the testing and precise calibration of LAND radiation thermometers at temperatures in the range 150 to 1150°C (300 to 2100°F).

The source is a primary standard black body for the high precision calibration of radiation thermometers. When the set point temperature is reached, the output from the thermometer under test is compared with the temperature of the source as measured by an optional Platinum thermocouple whose calibration is traceable to National Standards.

When used in conjunction with the Platinum thermocouple, which is supplied complete with a UKAS (United Kingdom Accreditation Service) calibration certificate, high precision is obtained. Alternatively, the source can be used in three other ways.

(i) If traceability to National Standards is required to a larger value of uncertainty, a UKAS certificate for the source can be supplied. The relationship between the indicated temperature, on the main controller, and the radiance temperature, as measured by a secondary standard radiation thermometer, is reported.

(ii) The temperature of the source can be measured by using a radiation thermometer of traceable calibration. This method of calibration can be described as calibration by comparison with a standard radiation thermometer. This method of calibration usually results in the most accurate as errors due to temperature gradients and non-black body conditions are eliminated.

(iii) If traceability to National Standards is not required, the source can be used without any certification. From previous work, the temperature as shown on the controller indication has been found to agree with the radiance temperature to within ±10°C (±20°F).

To simplify the lining up of LAND fixed installation radiation thermometers, an optical bench assembly is offered as an optional extra.

Uniform temperature conditions are achieved along the length of the cavity, which means that the source can also be used for the calibration of thermocouples by the comparison method.

1.1 Safety information

Every effort has been made during the design and manufacture of this furnace to ensure that it meets National and International standards of product safety. However, great care must be taken at all times when operating and maintaining high power furnaces which are capable of achieving high temperatures.

To reduce the risk of accident, follow the instructions listed below;

WARNING

To avoid the possibility of electric shock, never expose the heater windings, terminals or other electrical components with the furnace connected to the mains supply. After completion of a repair, replace all safety plates before switching on the furnace.

To avoid the possibility of burns, never attempt to dismantle the furnace until it has cooled to a safe temperature. This may mean leaving the furnace to cool overnight.

This furnace contains no asbestos. The alumina-silicate (ceramic fibre) materials used in this furnace release dust when disturbed which may, in some individuals, be an irritant to the skin, nose and throat.

SAFETY NOTE - REFRACTORY FIBROUS INSULATION

This furnace contains refractory fibres in it's thermal insulation. These materials may be in the form of fibre blanket or felt, vacuum formed board or shapes, mineral wool slab or loose fill fibre.

Normal use of the furnace does not result in any significant level of airborne dust from these materials, but much higher levels may be encountered during maintenance or repair.

Whilst there is no evidence of any long term health hazards, we strongly recommend that safety precautions are taken whenever the materials are handled.

Exposure to dust from fibre which has been used at high temperatures may cause respiratory disease.

When handling fibre, always use an approved mask, eye protection, gloves and long sleeved clothing.

Avoid breaking up waste material. Dispose of waste fibre in sealed containers.

After handling, rinse exposed skin with water before washing gently with soap (not detergent). Wash work clothing separately.

Before commencing any major repairs, we recommend reference to the European Ceramic Fibre Industry Association Bulletin Nº 11 and UK Health and Safety Executive Guidance Note EH46.

We can provide further information on request. Alternatively, our Service Department can quote for any repairs to be carried out, either at your premises or at Land Infrared.

2.0 DESCRIPTION

The LANDCAL P1200P comprises a cylindrical, refractory closed end tube (cavity) approximately 300mm (12.0in) long, with an internal diameter of approximately 50mm (2.0in). The cavity is cast from silicon carbide and the closed end is angled at 120° to increase the emissivity value.

The cavity is placed horizontally in an electrically heated wirewound furnace. To improve the temperature uniformity of the furnace, three independent heater windings are employed. The temperature of the windings is measured by Nicrosil-Nisil (Type N) thermocouples and controlled using three digital PID controllers with negligible short term drift.

A standard Platinum thermocouple, possessing a traceability certificate (such as a UKAS certificate), is inserted into the cavity from the rear of the furnace and used to determine the true temperature of the furnace. A second certificated thermocouple may be supplied and, when inserted into the cavity from the rear of the furnace, can be used to determine temperature gradients along the cavity.

Fig. 1 LANDCAL Blackbody Source Type P1200B

CA970262

3.0 SPECIFICATION

Maximum working temperature:	1150°C (2100°F)
Recommended temperature range:	150 to 1100°C (300 to 2000°F)
Heating rate:	2 hours to 1000°C (1850°F)
Stability:	With the source controlling at temperature the radiance temperature will vary by less than ±1K (±2°F) over a 30 minute period.
Radiation cavity	
material:	Silicon Carbide
inner diameter:	50mm (2.0in)
internal length:	300mm (12.0in)
length of sighting extension tube:	100mm (4.0in)
Emissivity:	0.998
Resistance heating element(s):	Resistance wire
Control thermocouple type:	Nicrosil-Nisil. Type N
Controller	
Master:	Eurotherm 2216 or 2416 with RS 232serial interface
Slaves:	Eurotherm 2216 or 2416
Electrical supply:	220/240V a.c., 50 to 60 Hz. Part No. 135.193 110/120V a.c., 50 to 60 Hz. Part No. 135.183
Power consumption:	3.0kW (220/240V operation)
Measuring thermocouple (if supplied)	
type:	B(6/30) or R(0/13) or S(0/10)
length:	600mm (23.6in)
sheath:	8 x 5 x 600mm
Overall dimensions	
length:	700mm (27.6in)
width:	360mm (14.2in)
height:	535mm (21.1in)
Bench to tube centre height:	365mm (14.4in)
Weight: Nett:	33kg (73lb)
Gross:	43kg/95lb

The input a.c. power supply required for the particular furnace is specified on the furnace identity plate.

NOTE

The Eurotherm controllers fitted to the furnace are configured for °C operation. If °F operation is required, details of how to reconfigure the controllers can be found in the Eurotherm Operating Instructions.

4.0 ELECTRICAL SUPPLY DETAILS

4.1 Electrical connections

The furnace requires a single-phase a.c. supply with earth (ground). The supply may be Live to Neutral non-reversible, Live to Neutral with reversible plug, or Live to Live. Check that the supply voltage is compatible with the voltage on the furnace rating label.

The supply point must be within reach of the operator and must incorporate either an isolating switch, which operates on both conductors, or a quickly removable plug. The supply must incorporate an earth (ground).

The wiring diagrams for the P1200B are given in Fig. 2 and Fig. 3.

The power cable connection schedule is given in Table 1.

Cable colour	Terminal label	Supply type Live-Neutral	Supply type Reversible or Live-Live
Brown	L	To live	To either power conductor
Blue	N	To neutral	To the other power conductor
Green/Yellow	PE	To earth (Ground)	To earth (Ground)

Table 1 Power cable connection schedule

4.2 Fuses

Mains fuses (F1):	220/240V operation, 13 Amps 200/210V operation, 16 Amps 110/120V operation, 32 Amps 100V operation, 32 Amps
Instrument circuit fuses (F2):	20mm x 5mm, 2 Amps
Heat light fuses (F3):	20mm x 5mm, 2 Amps

4.3 Earth leakage

WARNING

Care must be taken when operating the furnace with an earth leakage trip in circuit. At high temperatures, all ceramic materials become slightly conductive. This may mean that at temperatures above 1000°C a leakage current in excess of 30mA is present. This will cause an earth leakage trip switch to activate.

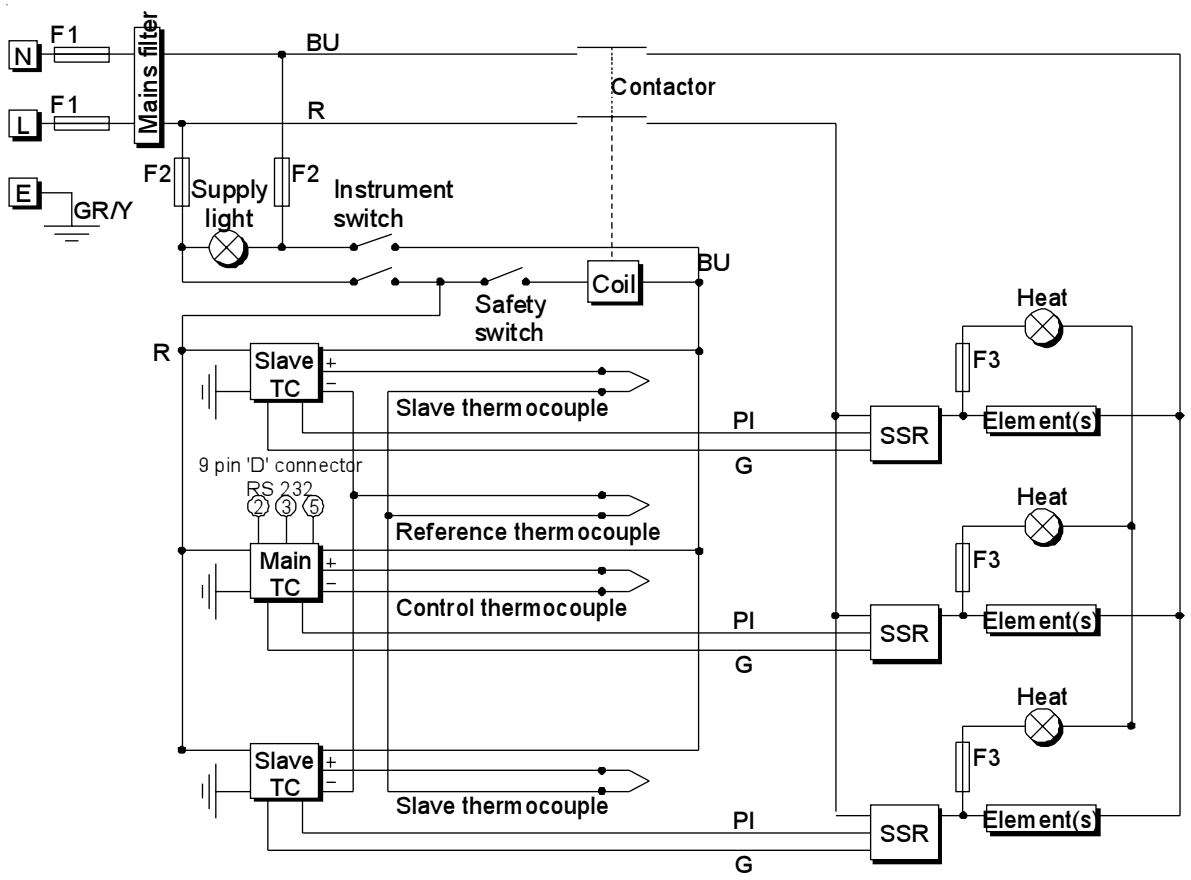

Key

R	Red	BU	Blue	TC	Temperature controller
GR/Y	Green & Yellow	G	Grey	SSR	Solid state relay
PI	Pink				

Fig. 2 Wiring diagram of the LANDCAL Blackbody Source, Type P1200B.
100 Volt and 110/120 Volt, single phase

CA970263

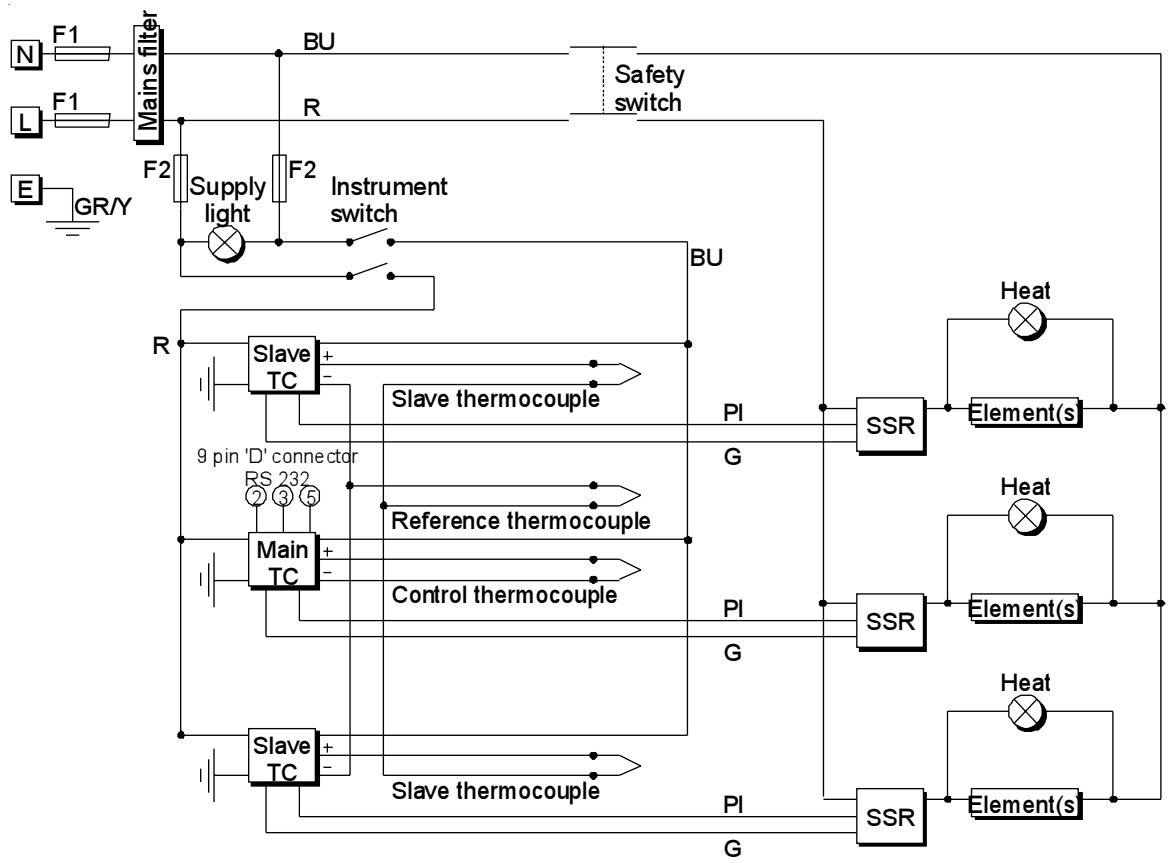

Key

R	Red	BU	Blue	TC	Temperature controller
GR/Y	Green & Yellow	G	Grey	SSR	Solid state relay
PI	Pink				

Fig. 3 Wiring diagram of the LANDCAL Blackbody Source, Type P1200B.
200/220/240 Volt, single phase

CA970264

5.0 COMMISSIONING

5.1 Inspection on receipt

Physically examine all items for any damage that may have occurred during transit. Check the contents against the packing note.

If any items have been damaged in transit, this should be reported to the carrier and to the supplier immediately, BUT DO NOT RETURN damaged items until the carrier has considered a claim. Save the packing with the damaged article for inspection by the carrier.

5.2 Furnace assembly

The following paragraphs describe the step by step procedure to prepare the furnace for switch on. Refer to Fig. 4.

To minimise the risk of damage to the furnace during transit, the cavity, cavity extension and positioning tube are supplied separately. If ordered, the measuring thermocouple(s) and thermocouple sheath(s) are also supplied separately. These items must be fitted as follows:-

(i) Remove the stainless steel plate from around the furnace opening.

(ii) Position the alumina positioning tube over the closed end of the cavity.

(iii) Locate the two lengths of mullite refractory tube into the lower grooves provided

The two tubes hold the cavity concentric between the heating elements. (These tubes may have been fixed for ease of assembly). The third groove in the cavity must be uppermost.

(iv) Slide the cavity into the furnace.

(v) Ensure the thermocouple entry holes (from the rear of the furnace) are in line.

(vi) Slide the white insulated cavity extension into position.

(v) Re-fix the stainless steel plate into position.

(vi) Locate the thermocouple(s) in the ‘measuring’ (middle) and, if required, into the ‘survey’ (top) holes.

5.3 Heating up the furnace from cold

The central zone of the source is controlled directly by the master Eurotherm controller. Each end zone thermocouple is wired in opposition to a central reference thermocouple, and the small voltage resulting when the zones are at different temperature is used by the slave end zone controllers. After switching on the source, adjust the setpoint of the slave controllers to zero.

5.3.1 Using the master Eurotherm Controller

(i) When switched on, the controller lights up, goes through a short test routine, then displays the measured temperature and starts to control. The output light glows or flashes when heating occurs.

(ii) To modify the set point, press the ‘Up’ or ‘Down’ button until the required value is obtained.

NOTE

All other controller parameters are factory-set and locked. For correct operation, it is not necessary to adjust any other parameters.

5.4 Using the RS 232 serial interface port

The RS232 option is supplied and the furnace is fitted with one subminiature D-socket connected to the controller communication module. RS232 is suitable for direct connection to a personal computer (PC), using a "cross-over" cable as follows (the linked pins at the computer end are recommended but may not be necessary). The cable is usually 9-pin at the furnace end and 9-pin at the computer, but other alternatives are shown in parentheses.

Furnace end of cable - female		**RS232 Cable: furnace to PC**	Computer end of cable - male		
	9-pin		**9-pin**	(25-pin)	
Tx	**3**		**3**	(2)	**Tx**
Rx	**2**		**2**	(3)	**Rx**
Com	**5**		**5**	(7)	**Com**
			7,8	(4,5)	**Link together**
			1,4,6	(6,8,20)	**Link together**

The furnace is shipped with the RS232 communications protocol set to "EIBISYNC" with the baud rate set to 9600 and no delay. The communication address is set to 1.

The source must only be connected and used with a PC by a person who understands how the serial communications function operates. If further information is required, contact your local EUROTHERM agent and request a copy of the Series 2000 Communication handbook - Publication No. HA 026230.

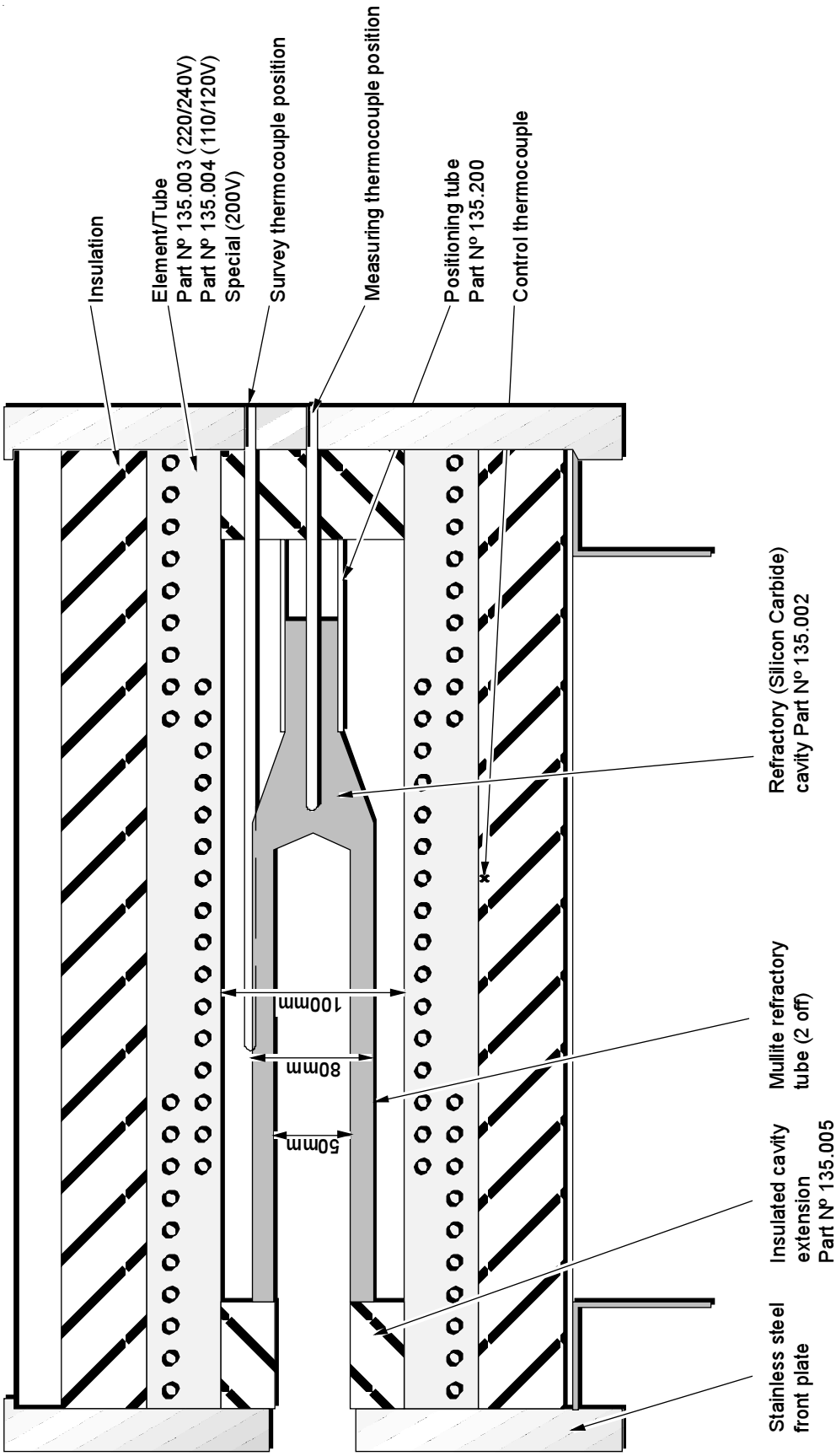

Fig. 4 Furnace assembly drawing of the LANDCAL Blackbody Source Type P1200B

6.0 USING THE FURNACE

6.1 Introduction

The furnace is designed to create an enclosure of uniform temperature, ideal for the calibration of radiation thermometers or thermocouples. The cone point of the refractory cavity target block installed in the furnace is placed in the area of minimum gradients within the furnace. When calibrating radiation thermometers, the target size requirements of the thermometer must, whenever possible, be fulfilled by the cone. If the thermometer views the walls of the target block, results of greater uncertainty will be achieved. When calibrating thermocouples, the hot junctions must be inserted into the cone area and the furnace aperture plugged with ceramic fibre to reduce conduction and convection losses.

6.2 Measuring thermocouple

Provision has been made to measure the temperature of the target block using a Platinum thermocouple, which can be inserted from the rear of the furnace into the target. A 600mm (24.0in) long, recrystallised Alumina sheath must always be used to protect the thermocouple from mechanical damage and contamination. When placed in the measuring position, the thermocouple junction lies approximately 20mm (0.75in) behind the cone point. The temperature of the block, as measured by the thermocouple, agrees with the cone point radiance temperature to within the uncertainty of the thermocouple.

The output from the thermocouple must be measured via a cold junction enclosure of known temperature to an indicator or digital voltmeter having a resolution of 0.1°C.

This is the recommended way to obtain the true temperature of the target cavity. The temperature indication on the controller must not be used as an accurate measurement of target cavity temperature.

6.3 Survey thermocouple

An assessment of the temperature gradients down the length of the target can be carried out. This should only be necessary if doubt exists about the condition of the furnace, or if it is to be used for the most accurate calibration work which demands minimum temperature gradients. The temperature gradients within the furnace are dependant on control temperature, so if the furnace is used over a large temperature span, several assessments at different temperatures may be required.

To carry out a gradient assessment, a thermocouple must be fully inserted into the 'S' for survey (top) hole from the rear of the furnace. Refer to Fig. 4 for assistance with the position of the survey sheath.

After the thermocouple has achieved thermal stability, measure the temperature of the furnace with both the measuring and survey thermocouples. Withdraw the survey thermocouple (leave the sheath in position) by 20mm (0.75in), wait until the output stabilises and again measure the two temperatures. Repeat for a series of 5 to 10 survey thermocouple immersion depths, i.e. from fully inserted to 100 to 200mm (4.0 to 8.0in) back from full.

To determine the magnitude of the gradients, subtract the survey thermocouple temperature from the measuring thermocouple temperature. To show the gradients a graph can be plotted of gradient against position as shown in Fig. 5.

6.4 Control thermocouple

The thermocouple which controls the furnace temperature is situated close to the furnace heating element, which will be at a higher temperature than the target cavity. The difference between controller set point temperature and target cavity temperature can be as high as 10°C (20°F). In these cases, if a target temperature of 1000°C (1830°F) is required, it is necessary to adjust the controller setpoint to 1010°C (1850°F.)

The temperature indication on the controller must not be used as an accurate measurement of target cavity temperature.

6.5 Uniform temperature conditions

It is possible to reduce the gradients, and hence improve the uniformity, by setting the slave zone controllers to a value other than zero. After carrying out the survey as outlined in Section 6.3, if the gradients found are excessive, then increase/decrease the slave zone controller settings and, after waiting for the furnace to achieve stability, repeat the survey. A third or fourth survey may be necessary to achieve optimum controller settings. The temperature gradients within the furnace are dependant on the control temperature. If the furnace is used over a wide temperature span several assessments at different temperatures may be required.

NOTE

The slave controllers work in conjunction with the main zone controller and supply more power (positive value to increase the zone temperature) or less power (negative value to decrease the zone temperature). They are both scaled ±200, which means that if the furnace temperature is set with the main zone controller at 1200°C (2200°F) and the slave zone controllers at +100, the booster winding will be operating at 1300°C (2400°F). This is approaching the melting point of the wire and continual use in this way will cause premature failure of the element.

Experience has shown that it should not be necessary to set the rear zone controller at a value higher than +50 and the front zone at a value higher than +100. When operating the furnace at a temperature higher than 1100°C (2000°F), set both slave zone controllers to zero.

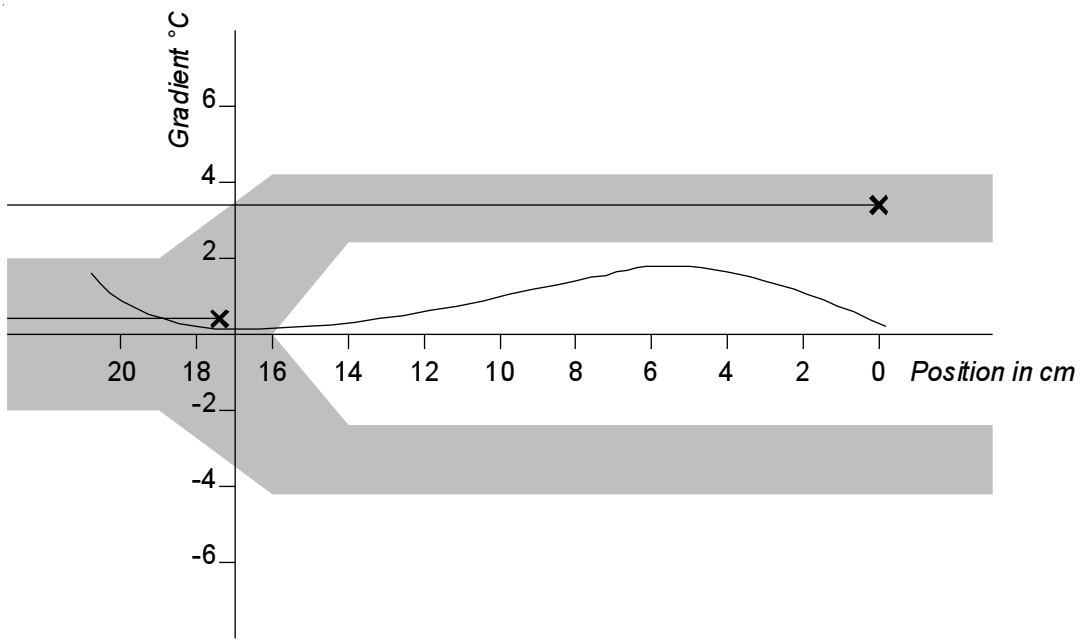

Fig. 5 Typical Gradients of a Furnace at 600°C/1100°F
LANDCAL Blackbody Source Type P1200B

CA970266

7.0 CALIBRATION OF RADIATION THERMOMETERS

7.1 Preparation

The furnace control setting will usually be the normal working temperature of the thermometer to be tested.

The target temperature is that indicated by the standard thermocouple in the 'measuring' position.

A convenient method of holding a fixed system radiation thermometer is to mount a holder horizontally onto an optical bench assembly having vertical and transverse vernier adjustments. Portable radiation thermometers are usually hand held.

Position the holder on the optical bench to obtain the desired distance between target and thermometer. Adjust the vertical and transverse vernier screws to align the holder correctly.

To reduce unnecessary heating from furnace radiation, it is recommended that a heat shield be placed between furnace and holder, and only removed during periods when outputs from the thermometers are being measured. Ensure that the shield is away from the sighting tube so that furnace conditions are not altered when it is removed.

7.2 Thermometer calibration

When soaked conditions have been obtained, place the thermometer in the holder, remove the heat shield and measure the thermometer output on the measuring apparatus. Immediately after measure the output from the 'measuring' thermocouple.

Convert both outputs into temperature, by reference to the relevant calibration tables, and compare.

7.3 Accuracy of calibration

The source has been designed for the accurate calibration of LAND radiation thermometers. The accuracy that can be achieved by using the source is dependent on:-

(i) The uncertainty of calibration and resolution of the measuring thermocouple
(ii) The emissivity of the source
(iii) The resolution of the thermometer under test

The uncertainty specified on the calibration certificate issued by the calibration laboratory will be a function of:-

(i) The calibration laboratory's capabilities
(ii) The type of thermocouple under test
(iii) The temperature range covered

Values of ±1K (±2°F) up to 1100°C (2000°F) and ±2K (±4°F) over the range 1100 to 1600°C (2000 to 2900°F) are typical for the uncertainty. A value of ±0.1K to ±1K (±0.2°F to ±2°F) should be specified for the resolution, depending on the type of measuring equipment used.

As the emissivity of the source is less than 1.00, the radiance temperature will be dependent on the wavelength of the thermometer under test. For example, a furnace operating at 1000°C (1832°F) with emissivity of 1.00 will show a temperature of 1000°C (1832°F) for a thermometer having a silicon cell (wavelength = 1µm) detector and a temperature of 1000°C (1832°F) for a thermometer having a pyroelectric (wavelength = 8 to 14µm) detector. However, a furnace operating with emissivity of 0.998 at 1000°C (1832°F) will show a temperature of 999.8°C (1831.6°F) for a thermometer having a silicon cell detector and a radiance temperature of 998.5 (1829.3°F) for a thermometer having a pyroelectric detector.

Most hand held thermometers and fixed installation thermometers used in conjunction with an indicator have a resolution of ±1K (±2°F). Fixed installation thermometers, whose output is measured on a digital voltmeter, will have a resolution of between ±0.1K and ±0.5K (±0.2°F and ±1.0°F).

To determine the best measurement capability, the uncertainty of each individual measurement component must be added together. Typical values at 1000°C are between ±3K and ±5K (±6°F and±10°F).

7.4 Calibration procedures

When calibrating radiation thermometers, it is important to follow documented step-by-step procedures to ensure that specified calibration conditions such as calibration distance, furnace temperature and aperture size are always met.

If you experience any difficulty in writing your own procedures, LAND Infrared can offer guidance as to which calibration conditions must be adopted for LAND products.

8.0 CALIBRATION OF THERMOCOUPLES

8.1 Introduction

Uniform temperature conditions are achieved along the length of the cavity, which allows the furnaces also to be used for the calibration of thermocouples by the comparison method. This method consists of comparing the thermocouple under test with a standard thermocouple, the calibration of which is traceable to National Standards.

As well as a uniform temperature source, basic equipment requirements would be a set of standard thermocouples, a reference (cold junction) source and a digital voltmeter for measuring the outputs from the thermocouples.

8.2 Thermocouple calibration

The test and standard thermocouples are placed in close proximity in the uniform temperature zone of the furnace. After allowing the thermocouples to soak at temperature, readings of output are noted. Hence the test thermocouple has been directly compared with the standard.

9.0 FAULT FINDING AND MAINTENANCE

9.1 Furnace does not heat up

(i)	The **HEAT** light is **ON**	→	The heating element has failed	→	Check also that the SSR is working correctly
(ii)	The **HEAT** light is **OFF**		The controller shows a **very high temperature** or a code such as **S.Br**	→	The thermocouple has broken or has a wiring fault
			The controller shows a **low temperature**	→	The door switch(es) (if fitted) may be faulty or need adjustment
				→	The contactor (if fitted) may be faulty
				→	The SSR could be failing to switch on due to internal failure, faulty logic wiring from the controller, or faulty controller
			There are no lights glowing on the controller	→	The **SUPPLY** light is **ON** ↓ The controller may be faulty or not receiving a supply due to a faulty switch or a wiring fault
				→	The **SUPPLY** light is **OFF** ↓ Check the supply fuses and any fuses in the furnace control compartment

9.2 Furnace overheats

(i)	The **HEAT** light goes **OFF** with the instrument switch	→	The controller shows a **very high temperature**	→	The controller is faulty
		→	The controller shows a **low temperature**	→	The thermocouple may have been shorted out or may have been moved out of the heating chamber
				→	The thermocouple may have been mounted the wrong way round
				→	The controller may be faulty
(ii)	The **HEAT** light **does not go OFF** with the instrument switch	→	The SSR has failed 'ON'	→	Check for an accidental wiring fault which could have overloaded the SSR

9.3 Replacing the control thermocouple

(i) Remove the outer mesh and the outer end-caps from the furnace body.

(ii) Remove the cylindrical body from the base. To reach the bolts or screws which fix the body to the base, remove the back panel from the base.

(iii) Disconnect the thermocouple from its terminal block. Make a note of the thermocouple connections. The leg of the thermocouple is marked blue. Compensating cable colour codings are:

Negative	*Positive (type N)*
White	Pink

It may help to release the terminal block from the furnace, retaining any porcelain spacers.

(iv) Withdraw the thermocouple from its sheath (the narrow-bore wound-in tube) and remove any broken bits of thermocouple.

(v) Bend the new thermocouple carefully to match the shape of the original (working from the terminal end). If there is a small difference in thermocouple length ensure that the distance from the tip to the first bend is the same.

(vi) Insert the new thermocouple into position and reconnect, restoring any removed porcelain spacers, and ensuring correct polarity: blue to white.

(vii) Reassemble the furnace.

9.4 Replacing current fuses

Access to internal fuses is by removal of the back panel.

9.5 Replacing the temperature controller

To replace the temperature controller, ease apart the two lugs at the side, grip the instrument and withdraw it from it's sleeve. Push in the replacement. Before handling the controller wear an anti-static wrist strap to avoid any possibility of damage by static electricity.

9.6 Replacing solid state relays

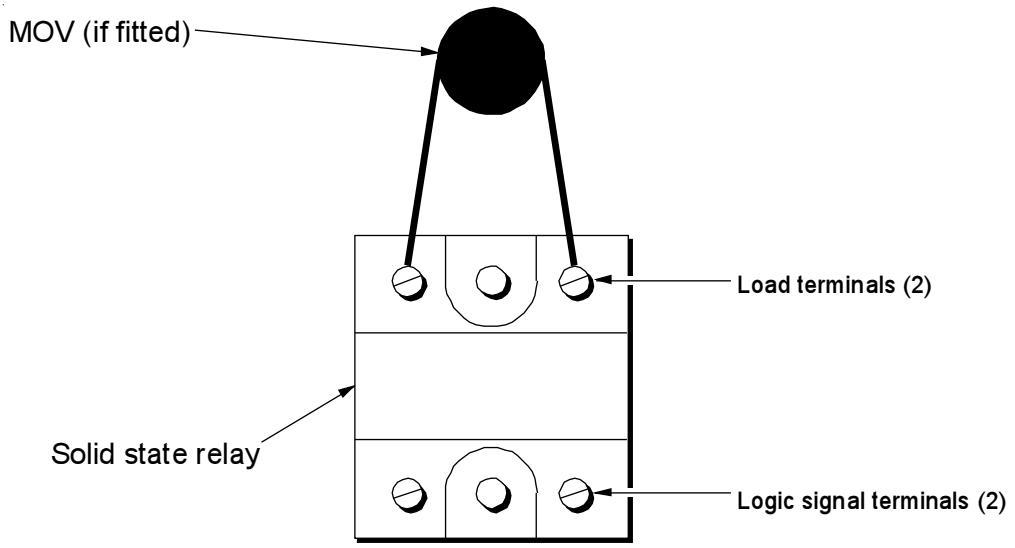

Fig. 6 Solid state relay connections

CA970270

(i) Disconnect the furnace from the electrical supply.

(ii) Remove the rear panel from the furnace or control cabinet and locate the solid state relay(s), removing any other panels necessary to give reasonable access to the relay(s).

(iii) Disconnect the four or five wires, noting their numbers and positions.

(iv) Remove the faulty relay and replace it with a new one, noting which way round to fit it. These are originally fitted with a thin layer of 'off-white' paste to give good heat transfer to the aluminium sheet. This paste is essential and although some may be left on the plate, more should be added as required to ensure good contact.

(v) Tighten the two fixing screws.

(vi) Refit the wires as noted in (iii) above. If the replacement solid state relay is supplied with a metal oxide varistor (MOV) it must be connected between the load terminals as shown in Fig. 6. It is not polarity dependent. The MOV protects the SSR from short periods of excess volage. If the replacement SSR is supplied without an MOV this is because the MOV is built-in on later versions.

(vii) Replace the panels.

(viii) Reconnect the furnace to the electrical supply.

9.7 Replacing furnace elements

(i) Remove the outer mesh and the outer end caps from the furnace body.

(ii) Remove the cylindrical body from the base; to reach the bolts or screws which fix the body to the base, remove the back panel from the base.

(iii) Disconnect all electrical leads from the terminal blocks on the furnace case. Note the colours and positions of the connecting leads to enable correct reassembly. Take care not to crack the porcelain terminal blocks - use two spanners where appropriate.

(iv) Remove the thermocouples; ensure that the matching terminal blocks and thermocouples are correctly recorded.

(v) Lay the furnace body horizontally with the split in the cylindrical case uppermost.

(vi) Remove the two metal end-caps from the body.

(vii) Remove the self-tapping screws which hold the terminal strip to the case join; the case will spring open slightly.

(viii) Remove the ceramic board discs from both ends.

(ix) Check to see if the insulation is entirely of fibre blanket i.e. is a soft material. If so, use a sharp knife to cut right through the insulation down to the wirewound tube element along the whole length of the body. The knife cut must be in line with the element lead wires.

(x) Slide the element gently out through the end of the furnace body.

(xi) If the insulation comprises two vacuum-formed half-shells, i.e. lightweight, but more rigid material containing the element wrapped with a thin layer of blanket, slide out the whole assembly.

(xii) Clean out the cylindrical case, removing any loose pieces of refractory cement which may have fallen off the old element.

(xiii) Remove the insulation beads from the tails of the old element and fit them to the replacement element.

(xiv) Slide in the new element, complete with the half-shells where appropriate.

(xv) Close up the furnace again, refitting the terminal strip (where applicable) and the end-caps. Ensure that any cut made in the insulation closes up completely: if the insulation appears loose or damaged in any way, please contact the Land Infrared Service Department.

(xvi) Refit the ceramic board discs to both ends of the furnace body.

(xvii) Replace and tighten the self-tapping screws which hold the terminal strip to the case join.

(xviii) Refit the two metal end-caps onto the body.

(xix) Replace the thermocouples, ensuring that the correct connections are made between the terminal blocks and thermocouples.

(xx) Reconnect all electrical leads to the terminal blocks on the furnace case, referring to the notes made in step (iii) for the colours and positions of the connecting leads to enable correct reassembly. Take care not to crack the porcelain terminal blocks - use two spanners where appropriate.

(xxii) Attach the cylindrical body to the base via the bolts or screws located behind the back panel.

(xxiii) Refit the outer end caps and the outer mesh onto the furnace body.

(xxiv) To rule out the possibility that the element failed because of a fault elsewhere in the electrical system, check that the furnace is controlling properly.

(xxv) Let the furnace heat up at its maximum rate to 900°C (1652°F) without interruption, and then soak for 1 hour. This must be done in conditions of good ventilation.

10.0 EUROTHERM TEMPERATURE CONTROLLER

10.1 User Guide

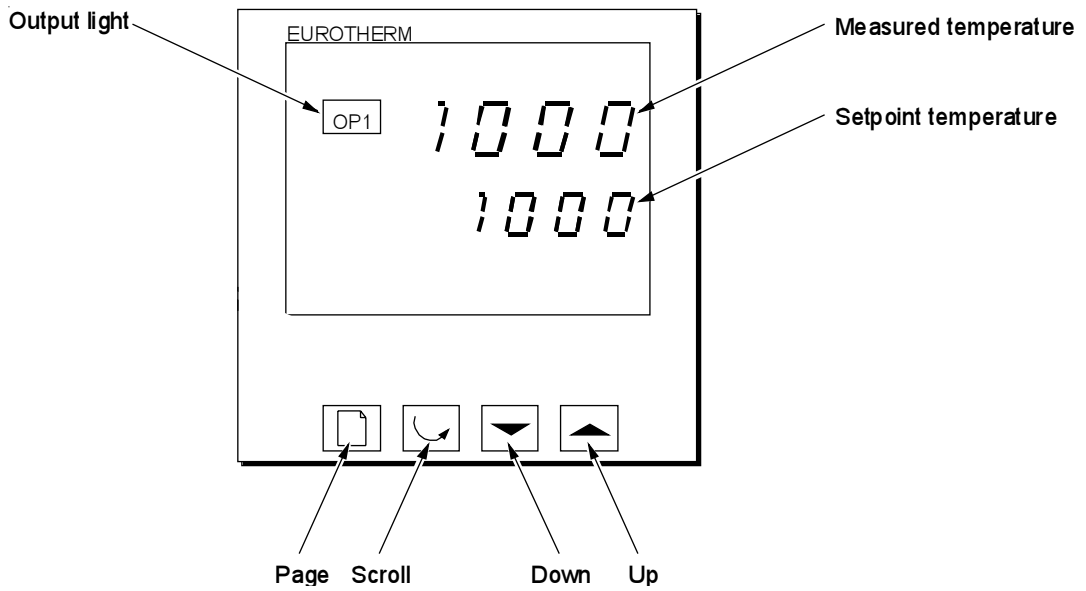

Fig. 7 Eurotherm - front panel controls

CA970253/a

When switched on, the controller lights up, goes through a short test routine, and then displays the measured temperature and starts to control. The output light glows or flashes as heating occurs. The **Page** key allows access to parameter lists within the controller; most lists and parameters are hidden and cannot be accessed by the operator (they contain factory-set parameters which should not be changed). A single press of the page key displays the temperature units, normally set to °C; further presses reveal the lists indicated in the navigation diagram, Fig. 8. The **Scroll** key allows access to the parameters within a list. A single press displays the temperature units; further presses reveal the parameters in the current list indicated in the Navigation Diagram. Some parameters are display-only; others may be altered by the operator. To return to the Home list at any time, press the Page and Scroll keys simultaneously, or wait for 45 seconds. The **Up** and **Down** keys are used to alter the setpoint or other parameter values.

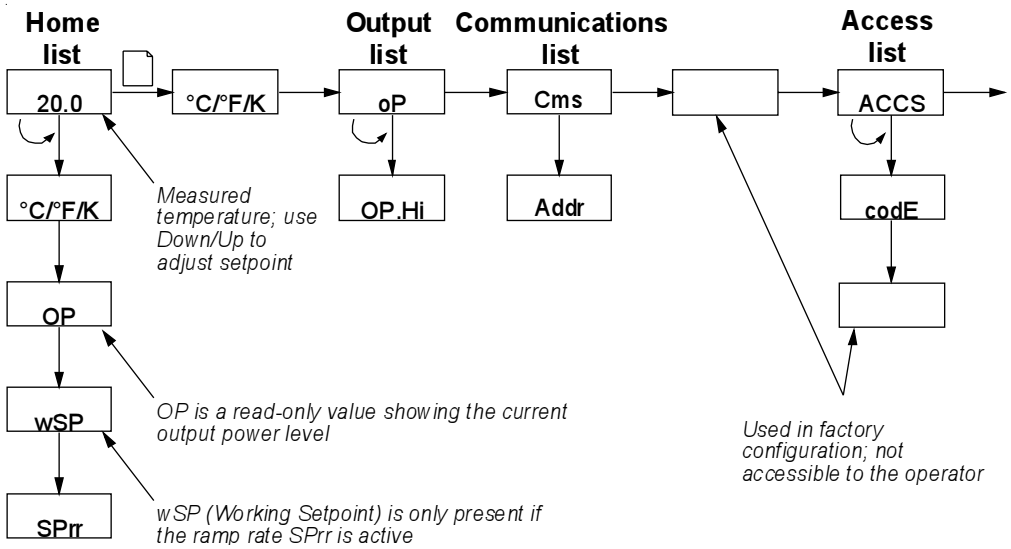

Fig. 8 Eurotherm Controller - navigation diagram

CA970281/a

10.2 Altering the Setpoint

(i) Press either the **Down** or **Up** key once to display the setpoint.

(ii) Use the **Down** or **Up** key to adjust the setpoint value.

The display returns to the measured temperature when no key is pressed for 0.5 seconds.

10.3 Altering the Ramp Rate

(i) Press the **Scroll** key until the legend *SPrr* (SetPoint ramp rate) is displayed.

(ii) Use the **Down** or **Up** key to adjust the ramp rate value.

The ramp rate sets the maximum rate of heating or cooling in degrees per minute. A value of *OFF* cancels the ramp rate, allowing heating and cooling at the maximum rate.

10.4 Altering the Power Limit (when applicable)

(i) Press the **Page** key until *oP* (output list) is displayed.

(ii) Press the **Scroll** key until *OP.Hi* (Output High) is displayed.

(iii) Press the **Down** key once to display the value of *OP.Hi* ***and write down the value.***

WARNING

Do not increase the value without correct calculation; the furnace elements or wiring could burn out.

(iv) To alter the value, the **Down** or **Up** key. Do not set the value to zero; this will prevent the furnace from heating.

10.5 °C to °F conversion

To change the controller from °C to °F operation, proceed as follows:

(i) Depress both the **Up** and **Down** keys whilst turning on the instrument switch until the controller displays *ConF*.

(ii) Use the **Up** or **Down** key to change the security configuration number to *45*.

(iii) Leave the display at this setting for a few seconds until *PASS* is displayed.

(iv) Press the **Page** key repeatedly until *InSt Conf* is displayed.

(v) Press the parameter key to display *Unit* and use the **Up** or **Down** keys to change from °C to °F (other units are K and none).

(vi) Press the **Page** key repeatedly until Exit *(E=It)* is displayed.

(vii) Use the **Up** key to select *Yes*.

(viii) Leave the controller for a few moments until it reverts to the normal display.

The temperature setting will now be made in the new units selected. All temperature limits and PID parameters are resized automatically to suit the new units.

WARNING

Do not alter any other parameters

10.6 Altering the communication address

(i) Press the page key until cmS is displayed.
(ii) Press the scroll key until Addr (address) is displayed.
(iii) To alter the value press the up or down key.

The display returns to the measured temperature when no key is pressed for 45 seconds.

11.0 SPARES AND ACCESSORIES

The spare parts listed in Table 2 are available for use with the Landcal Blackbody Source Type P1200B:

Description		Land Part No.
Silicon carbide cavity		135.002
Heating elements/tube 220/240 volt		135.003
Heating elements/tube 110/220 volt		135.004
Insulated cavity extension		135.005
Solid state relay		135.005
Measuring thermocouple, 0.6 metre long with outer sheath diameter 8mm supplied complete with UKAS certificate	Type R Type S Type B	135.149 135.150 135.151
Positioning tube - RCA 54x45x178mm long		135.200

Table 2 List of spare parts

The calibration accessories listed in Table 3 are available for use with the Landcal Blackbody Source Type P1200B:

Description	Land Part No.
Optical bench calibration accessory* (0.5 metre long)	135.124
Optical bench calibration accessory * (1.0 metre long)	135.125
Optical bench calibration accessory * (2.0 metre long)	135.114
Land Fibroptic Thermometer holder kit	135.155
Land System 4 Thermometer holder kit	135.176

* Supplied complete with LAND thermometer jacket holder

Table 3 List of calibration accessories